REV.	ECN NO.	DATE	SIGN	DESCRIPTION
A	Initial Release	2013/09/12	Vicky	Old Item No. CAP-WBCMMSA2

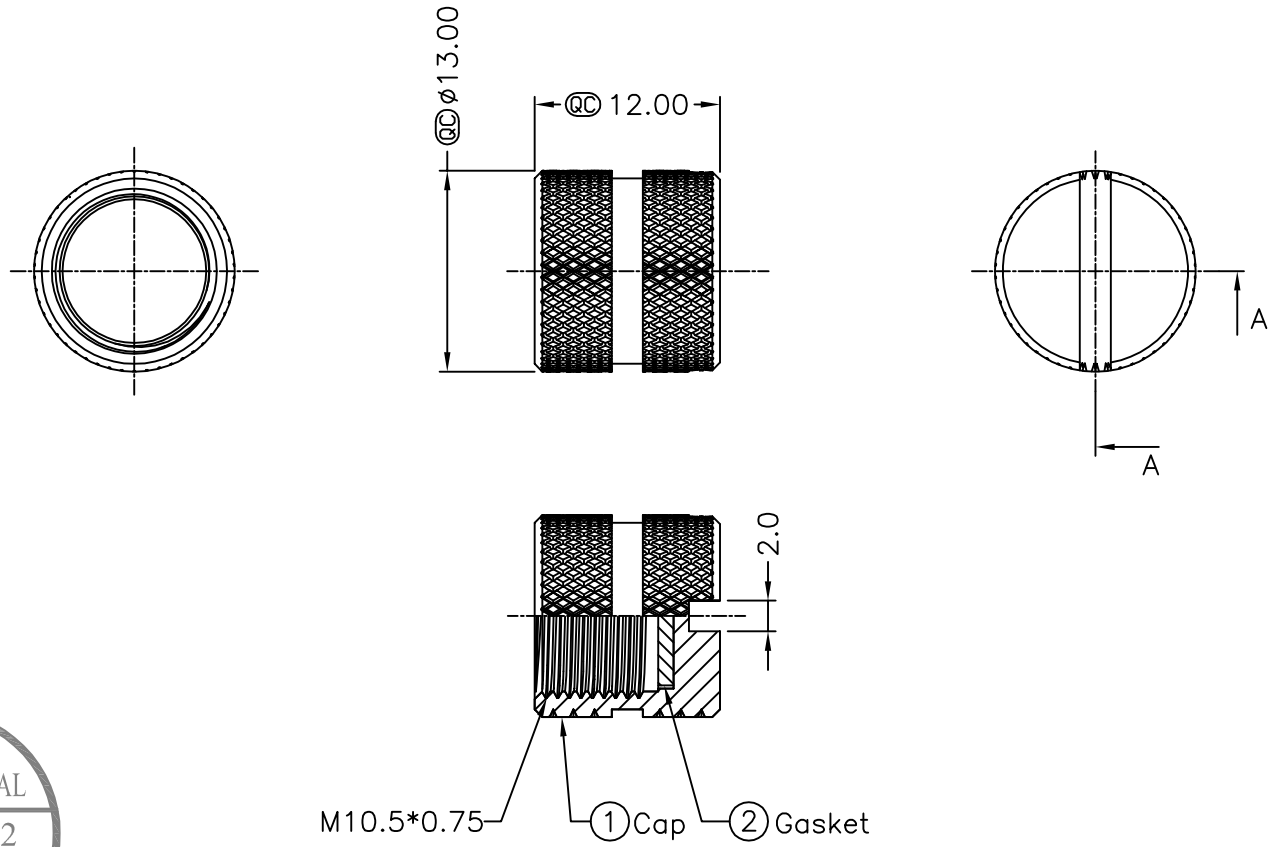

Section A–A

Note:
* QC Important Dimension.
* Waterproof Rate: IP67
* Cap: Copper Alloy, Gold Plated
* Gasket: EPDM, Black

ALTW DCC. DEPT. CONFIDENTIAL 2012.09.16 ISSUED

ALTW CONFIDENTIAL 2013.09.12 R&D DEPT.

UNIT:mm	TITLE: Waterproof Cap M10.5*0.75P For Male Conn Screw Type	**Amphenol LTW** 安費諾亮泰企業股份有限公司	ITEM NO: CAP-WBCMSMA2	DRAWN BY: Vicky	DATE: 2013/09/12
TOLERANCE: .X ±0.25, .XX ±0.1, .XXX ±0.05, ANGLES ±1°	SCALE: Free / SHEET: 1 OF 1		DWG NO: CAP-WBCMSMA2	CHECKED BY: Sam	DATE: 2013/09/12
	REV.: A / SIZE: A4 / QC :Inspection Item		CUSTOMER: ALTW	APPROVED BY: Rita	DATE: 2013/09/12

THIS DOCUMENT IS SUBJECT TO CHANGE WITHOUT NOTICE. IT IS CONFIDENTIAL AND A PROPERTY OF Amphenol LTW. DISCLOSURE TO THIRD PARTY HAS TO BE AUTHORIZED BY Amphenol LTW.