REV.	ECN NO OR DESCRIPTION	REVISED	DATE

Pb Process Capable

RoHS Compliant 2011/65/EU

HALOGEN Compliant Halogen Free

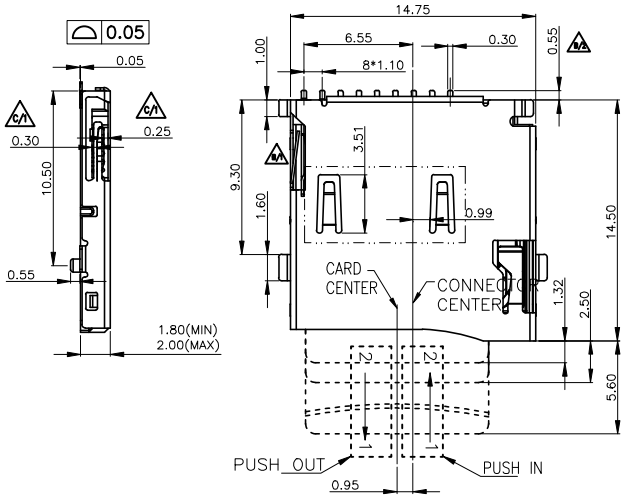

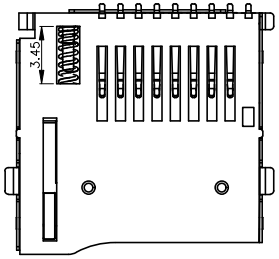

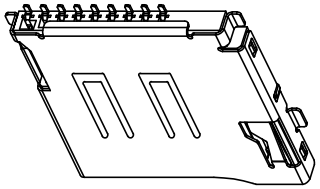

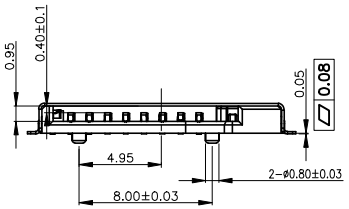

PIN NO.	NAME	YTPE	DESCRIPTION
1	DAT2	I/O/PP	DATE LINE(BIT2)
2	CD/DAT3	I/O/PP	CARD DETECT DATE LIN(BIT3)
3	CMD	PP	COMMAND RESPONSE
4	VDD	S	SUPPLY VOLTAGE
5	CLX	I	CLOCK
6	VSS	S	SUPPLY VOLTAGE GROUND
7	DATO	I/O/PP	DATE LINE(BITO)
8	DAT1	I/O/PP	DATE LINE(DIT1)
9	CD	CD	CD

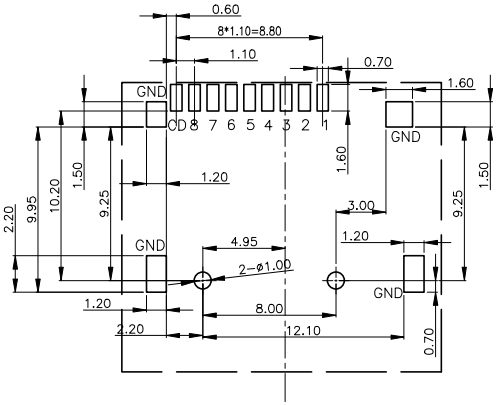

RECOMMENDED P.C.B HOLE LAYOUT
COMPONENT SIDE VIEW(TOLERANCE: +/-0.05)

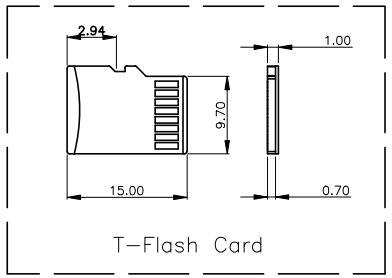

NOTES:
1.MATERIAL:
HOUSING: HIGH TEMPERATURE THERMOPLASTIC UL94V_0,COLOR:BLACK.
CONTACT: COPPER ALLOYS.
COVER: COPPER ALLOYS OR STEEL.
2.PLATING:
UNDERPLATE: NICKEL.
CONTACT AREA: GOLD OVER NICKEL.
SOLDER AREA: TIN OVER NICKEL.
3.MULTIMEDIA CARD COMPATIBLE

UNLESS OTHERWISE SPECIFED TOLERANCES		东莞市汉博电子科技有限公司 DONGGUAN HANBO TECHNOLOGY CO. , LTD			
DECIMALS:	ANGLES:	TITLE	T-FLASH 外焊 PUSH 带双压片镀1U		
X :±0.5	X :±2°	DWN	xiong	TF-015D	
X.X :±0.20	X.X :±1°	CHKD	lee	SCALE:1:1	UNIT: mm
X.XX :±0.10		APVD	wang	SIZE: A4	SHEET:1OF 1 REV: A4
		CUSTOMER COPY			