REVISIONS					
REV.	ECN NO.	LOCATION	DESCRIPTION	DATE	DESIGN
A0	N/A		INITIAL RELEASE	/	/
A1	N/A		图面升级整理图面	2024.12.20	阿树

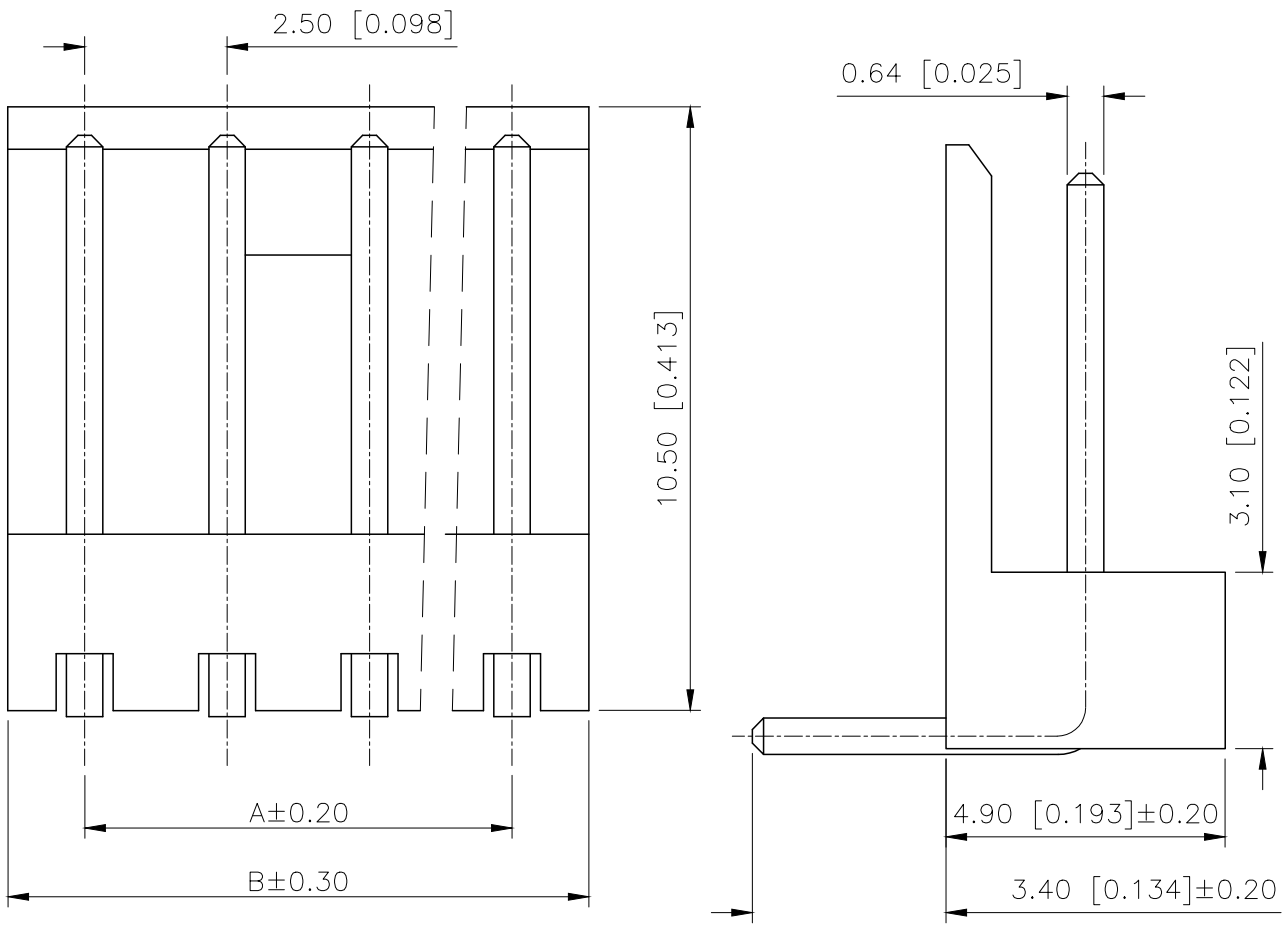

Specifications:
规格：
Voltage rating:250V AC/DC
额定电压：250V AC/DC
Current rating:3A AC/DC
额定电流：3A AC/DC
Withstanding voltage:1000V AC/minute
耐受电压：1000V AC/分钟
Temperature range:−40℃−+125℃
温度范围：−40℃−+125℃
Insulation resistance:1000MΩ min
绝缘电阻：1000MΩ Min
Contact resistance:20mΩ Max
接触电阻：20mΩ Max

PART NO.:

X2511 W R−XX−N0 SN
① ② ③ ④ ⑤ ⑥

①Series No
②Category:W−Wafer
③Welding Board Angle:R−Stright 90°
④Row No.−Pin No.:XX−02P~12Pin
⑤Material:N0−PA66 UL94V−0
⑥Plating:SN−Tin Plated

Poles	Dimensions(mm)	
	A	B
02	2.50	5.00
03	5.00	7.50
04	7.50	10.00
05	10.00	12.50
06	12.50	15.00
07	15.00	17.50
08	17.50	20.00
09	20.00	22.50
10	22.50	25.00
11	25.00	27.50
12	27.50	30.00

X2511WR−XX−N0SN	PA66	Brass	X2511H
PART N0	Material	Material(Pin)	Suitable XKB Housing

AuGLAR	±5°
X.	±0.40
X.x	±0.30
X.xx	±0.20
X.xxx	±0.15
UNSPECIFIED TOLERAuCES	

XKB Connection 星创

DESIGN	阿树	VIEW:	MODEL TYPE: 2.5mm Crimp Style Connector
CHECKED		UNIT: mm/in	PART NO.: X2511WR−XX−N0SN
APPROVED		SIZE: A4	DWG NO.:

XKB INDUSTRIAL PRECISION CO.,LIMITED

SCALE	PAGE	REVISION
N/A	1/1	A1