THIS DRAWING IS UNPUBLISHED. RELEASED FOR PUBLICATION 20
© COPYRIGHT 20 BY - ALL RIGHTS RESERVED.

REVISIONS

P	LTR	DESCRIPTION	DATE	DWN	APVD
	C	RELEASED PER ECO-20-010202	09JUL2020	DCB	DH

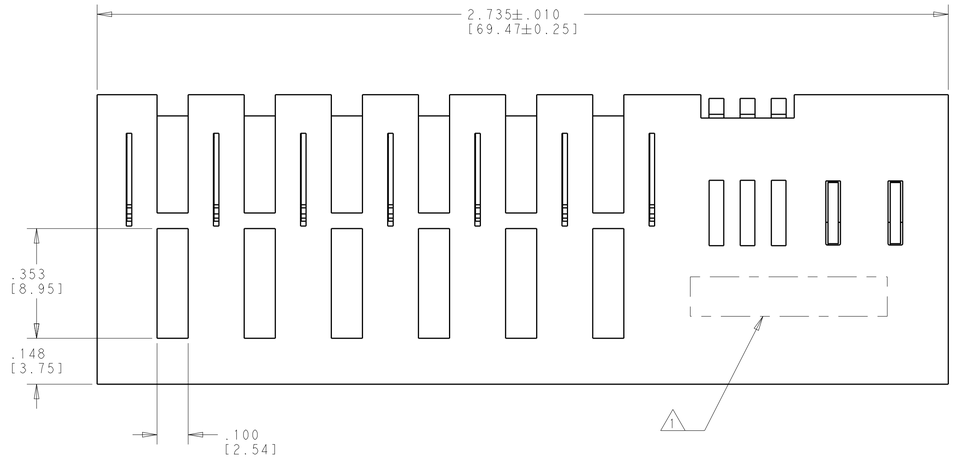

1. "TE", PART NUMBER AND DATE CODE TO BE MARKED IN AREA SHOWN PARTS UNDER 2.00 [50.8] LONG MAY BE MARKED ON BOTH SIDES

2. MATERIAL:
HOUSING - GLASS FILLED HIGH TEMP THERMO PLASTIC,BLACK, UL94 V-O
SIGNAL CONTACT - HIGH CONDUCTIVITY COPPER ALLOY
POWER CONTACT - HIGH CONDUCTIVITY COPPER ALLOY
LOW POWER CONTACT - HIGH CONDUCTIVITY COPPER ALLOY

3. CONTACT PLATING:
SIGNAL CONTACTS - .000050 [0.00127] MIN Ni UNDER ALL
.000050 [0.00127] MIN Au ON CONTACT AREA
.000005 [0.00013] MIN Au AT PCB INTERFACE
POWER CONTACTS - .000050 [0.00127] MIN Ni UNDER ALL
.000050 [0.00127] MIN Au ON CONTACT AREA
.000005 [0.00013] MIN Au AT PCB INTERFACE

4. CONNECTOR OUTLINE

5. DATUM AND BASIC DIMENSIONS ESTABLISHED BY CUSTOMER

6. PCB - ALL HOLE DIAMETERS ARE FINISHED HOLE SIZES

7. PCB - .0453±.0010 [1.151±0.025] DRILLLED HOLES PLATED WITH .0003 [0.008] MIN Sn OVER .001-.003 [0.03-0.08] Cu PLATING TO ACHIEVE A .040±.003 [1.02±0.08] HOLE.

8. SUGGESTED NON-PLATED CLEARANCE SLOTS FOR HIGH VOLTAGE APPLICATIONS. OPTIONAL HIGH VOLTAGE FIN COMPONENTS 2313445-1 SOLD SEPARATELY (6 PER CONNECTOR).

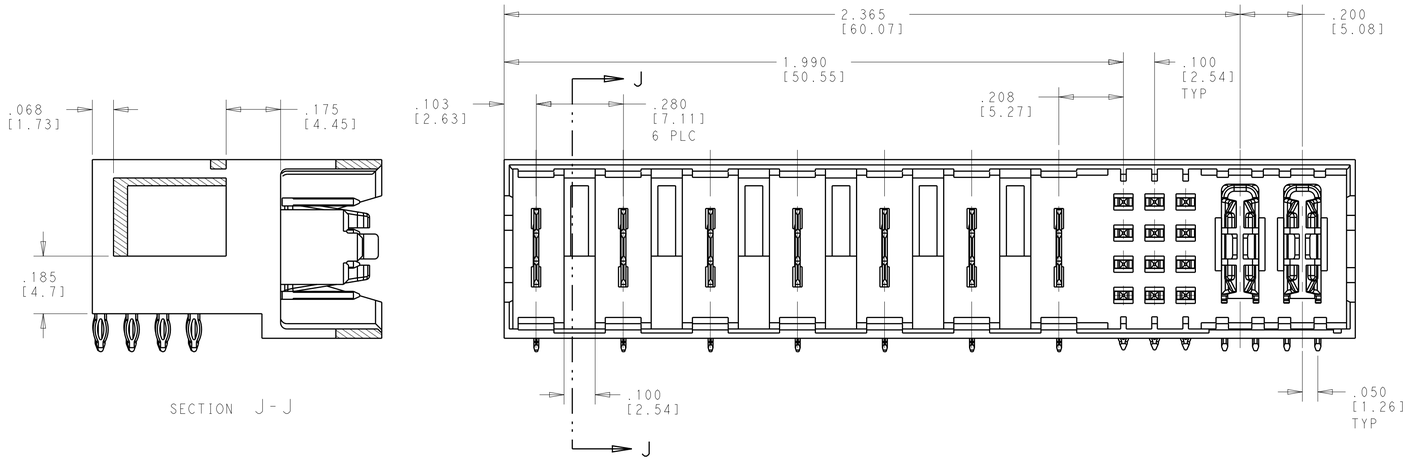

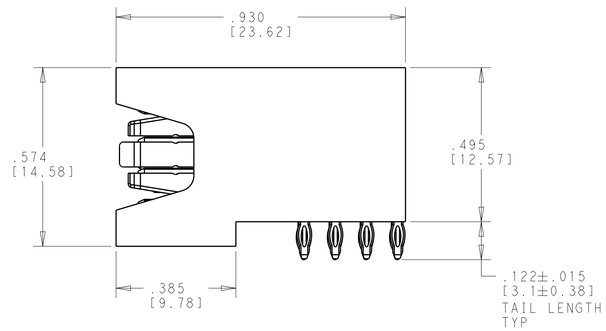

DESCRIPTION	PART NUMBER
7LP+12S+2P	2332793-1

THIS DRAWING IS A CONTROLLED DOCUMENT.

DIMENSIONS: INCHES [mm]

TOLERANCES UNLESS OTHERWISE SPECIFIED:
0 PLC ±-
1 PLC ±-
2 PLC ±-
3 PLC ±.005
4 PLC ±.0020
ANGLES ±2°

MATERIAL - 2
FINISH - 3

DWN D. BELACK 09SEP2018
CHK -
APVD C. GINGRICH 09SEP2018
PRODUCT SPEC 108-163023
APPLICATION SPEC 114-13251
WEIGHT -

TE Connectivity

NAME MULTIBEAM 270V, RA ASSY VITA 62.1 3U P0, PRESS FIT

SIZE A1 | CAGE CODE 00779 | DRAWING NO C-2332793 | RESTRICTED TO -

CUSTOMER DRAWING | SCALE 4:1 | SHEET 1 OF 2 | REV C

4805 (3/13)

THIS DRAWING IS UNPUBLISHED. RELEASED FOR PUBLICATION 20
© COPYRIGHT 20 BY - ALL RIGHTS RESERVED.

REVISIONS

P	LTR	DESCRIPTION	DATE	DWN	APVD
	-	SEE SHEET 1	-	-	-

PART NUMBER	ROWS	POWER													SIGNAL			POWER	
		LP1	LP2	LP3	LP4	LP5	LP6	LP7	LP8	LP9	LP10	LP11	LP12	LP13	1	2	3	P1	P2
2332793-1	D	LM	-	LM	-	LM	-	LM	-	LM	-	LM	-	LM	J	J	J	TM	TM
	C														K	K	K		
	B														N	N	N		
	A														S	S	S		
7LP+12S+2P																			

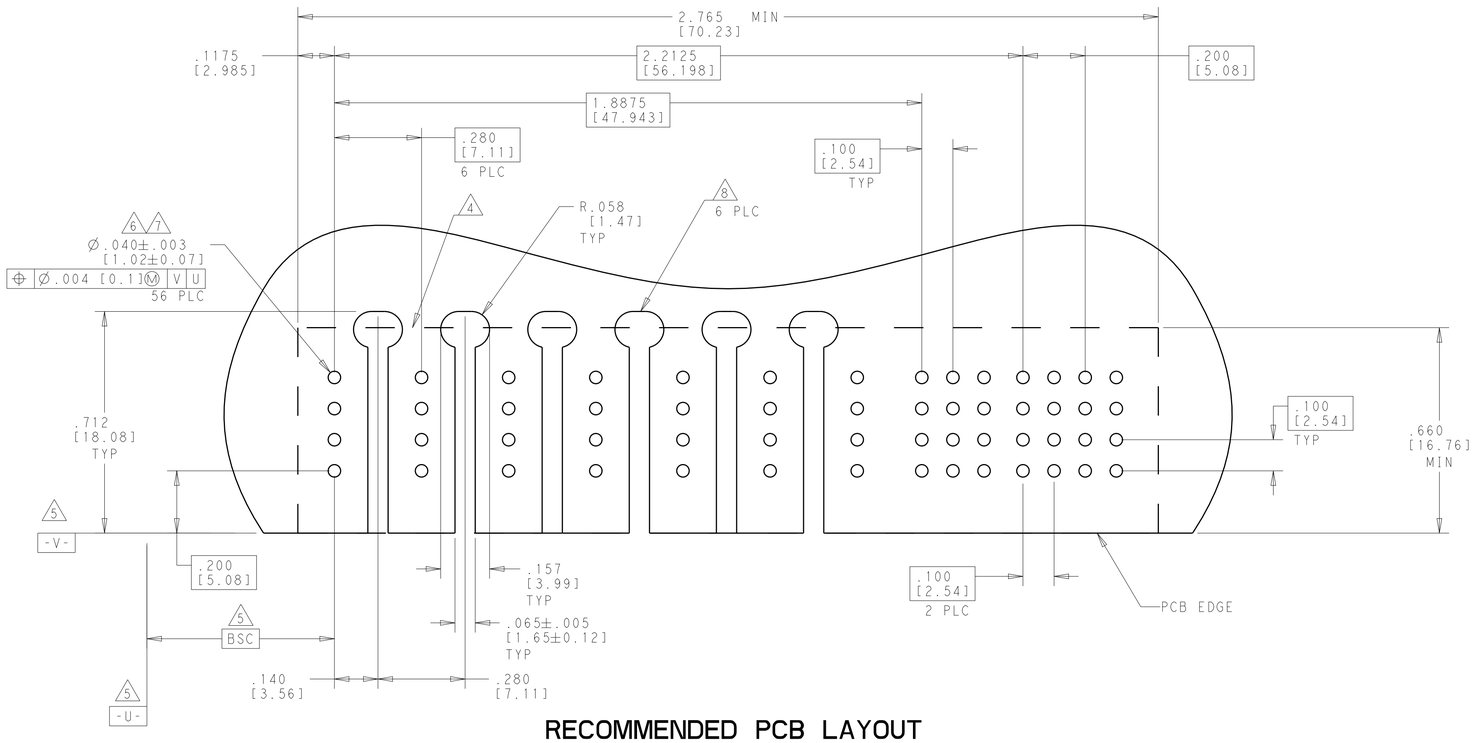

RECOMMENDED PCB LAYOUT

DESCRIPTION	IDENTIFIER
STD PRESS FIT TYPE SIGNAL CONTACT, .135 [3.43] TAIL LENGTH, ROW D	J
STD PRESS FIT TYPE SIGNAL CONTACT, .135 [3.43] TAIL LENGTH, ROW C	K
STD PRESS FIT TYPE SIGNAL CONTACT, .135 [3.43] TAIL LENGTH, ROW B	N
STD PRESS FIT TYPE SIGNAL CONTACT, .135 [3.43] TAIL LENGTH, ROW A	S
.120 [3.05] PRESS FIT POWER CON	TM
.120 [3.05] PRESS FIT STD POWER CON	LM

THIS DRAWING IS A CONTROLLED DOCUMENT.

DIMENSIONS: INCHES [mm]

TOLERANCES UNLESS OTHERWISE SPECIFIED:
0 PLC ±-
1 PLC ±-
2 PLC ±-
3 PLC ±.005
4 PLC ±.0020
ANGLES ±2°

MATERIAL - 2
FINISH - 3

DWN D. BELACK 09SEP2018
CHK -
APVD C. GINGRICH 09SEP2018
PRODUCT SPEC 108-163023
APPLICATION SPEC 114-13251
WEIGHT -

TE Connectivity

NAME MULTIBEAM 270V, RA ASSY
VITA 62.1 3U P0, PRESS FIT

SIZE A1 | CAGE CODE 00779 | DRAWING NO C-2332793 | RESTRICTED TO -

CUSTOMER DRAWING | SCALE 4:1 | SHEET 2 OF 2 | REV C

4805 (3/13)