	COUNT	DESCRIPTION OF REVISIONS	BY	CHKD	DATE		COUNT	DESCRIPTION OF REVISIONS	BY	CHKD	DATE
△					. .	△					. .
△					. .	△					. .
△					. .	△					. .

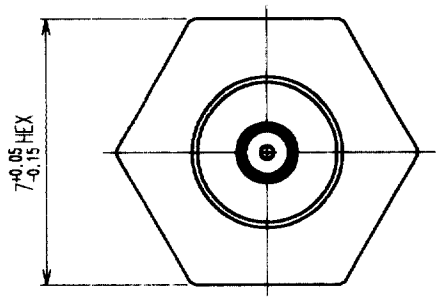

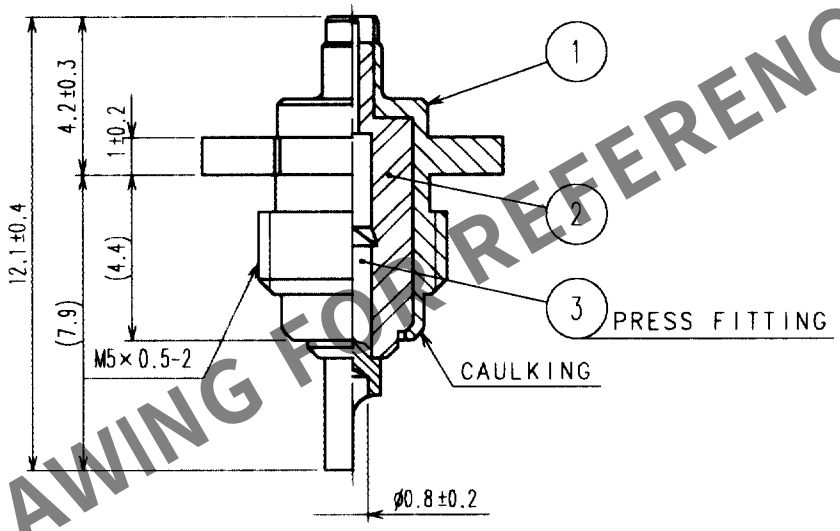

HRS DRAWING FOR REFERENCE

NOTE 1. THIS PRODUCT DOES NOT PROVIDE A LOCKING STRUCTURE. USE ONLY AS CHECKING TERMINALS FOR THE W.FL SERIES.
2. THIS PRODUCT DOES NOT PROVIDE WRENCHING PREVENTION. ALIGN THE AXIS OF THE MATING PAIR AHD INSERT AND EXTRACT VERTICALLY.
3. ROTATIONAL POSITIOH OF THE SOLDER CUP OF THE CENTER CONTACT SHALL BE OPTIONAL.

NO.	MATERIAL	FINISH, REMARKS
3	BERYLLIUM COPPER	GOLD PLATING
2	PTFE	
1	STAINLESS STEEL	NICKEL PLATING

CODE NO.(OLD)	DRAWN	DESIGNED	CHECKED	APPROVED	RELEASED
CL396-4428-8	03·06·17	N. Ninomiya 03·06·10	M. Yamane 03·06·10	F. Kobayashi 03·06·10	

TO
RF

SCALE 5 : 1
UNITS mm

DRAWING NO. EDC4-136554

PART NO. W.FL-R-1

HRS HIROSE ELECTRIC CO.,LTD.

CODE NO. CL331-0483-9

1/1

FORM NO.228

Jun.1.2024 Copyright 2024 HIROSE ELECTRIC CO., LTD. All Rights Reserved.
In case of consideration for using Automotive equipment / device which demand high reliability, kindly contact our sales window correspondents.