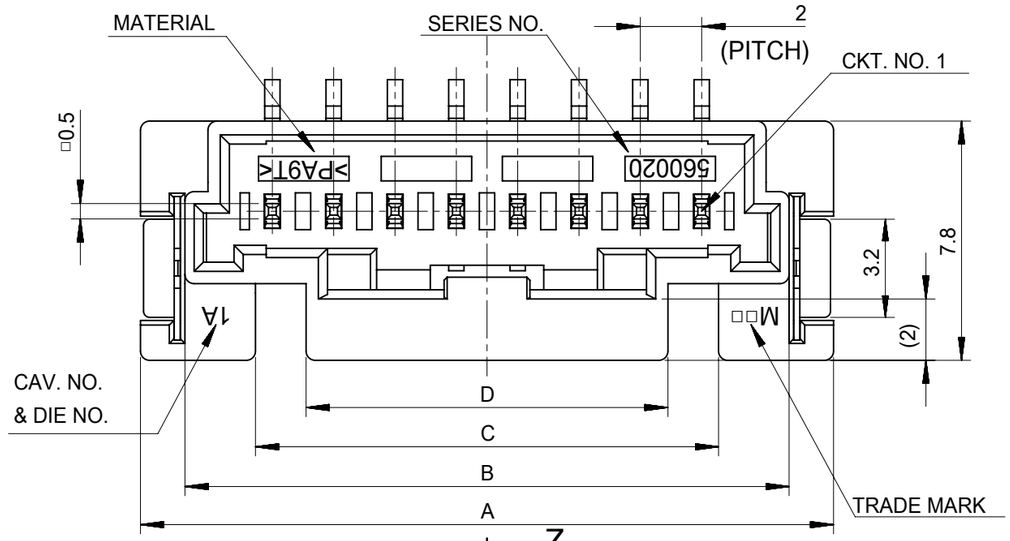

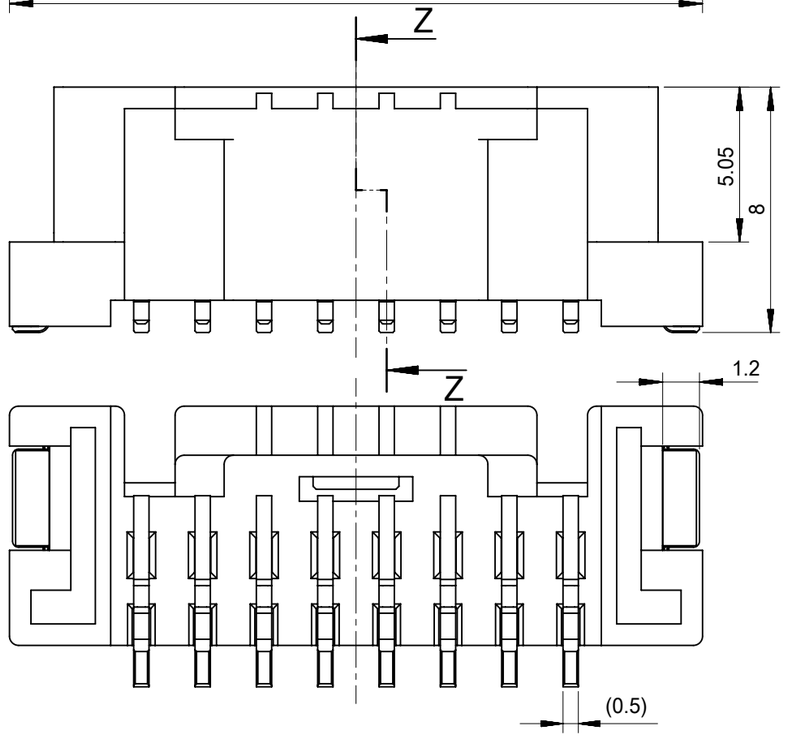

8CKTS

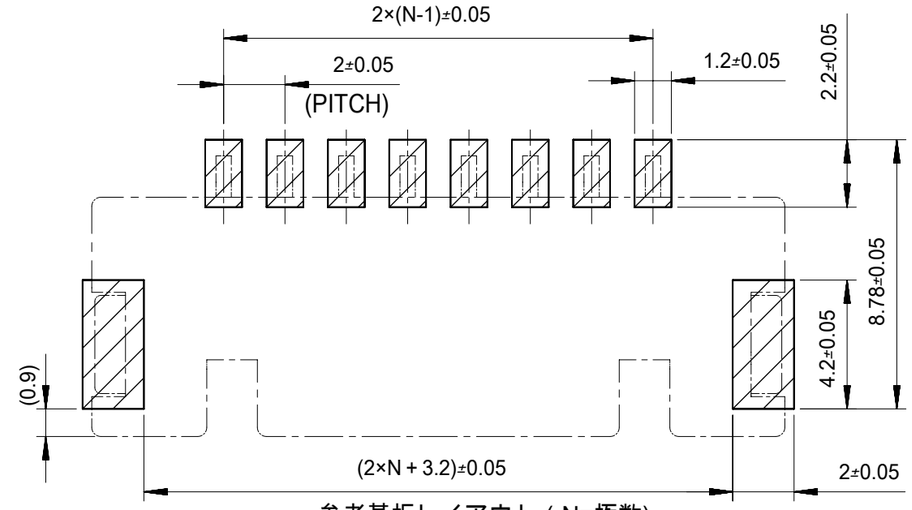

参考基板レイアウト (N=極数)

PCB PATTERN LAYOUT(N:CIRCUIT)

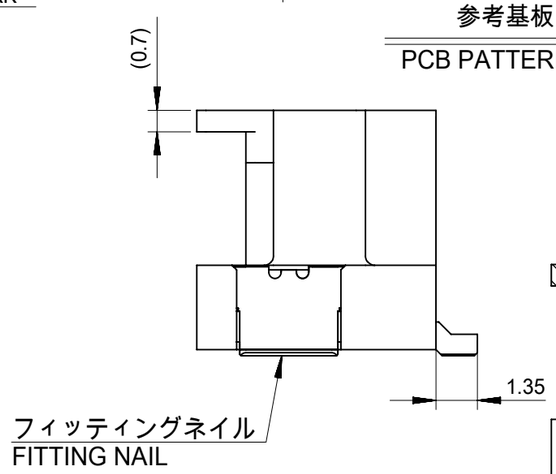

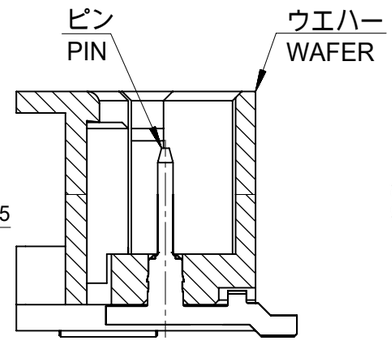

SECTION Z-Z

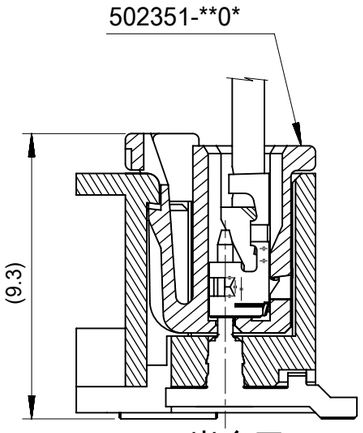

嵌合図

MATED DRAWING

注記
NOTES

1．材質
ウエハー：耐熱性ナイロン UL94V-0
ピン：銅合金、ニッケル下地、錫メッキ、金メッキ
フィッティングネール：銅合金、ニッケル下地、錫メッキ
MATERIAL
WAFER: POLYAMIDE UL94V-0
PIN: COPPER ALLOY,GOLD OR TIN OVER NICKEL PLATE.
FINNTING NAIL: COPPER ALLOY, TIN OVER NICKEL PLATE.

2．色：ナチュラル、黒、赤、青
COLOR: NATURAL, BLACK, RED, BLUE

3．嵌合相手：
ハウジング:502351-**0*
錫メッキ端子:50212-8*00,50372-8*00,560085-0101
金メッキ端子:56161-8*81
MATES WITH
HOUSING:502351-**0*
SN PLATING TERMINAL: 50212-8*00,50372-8*00,560085-0101
AU PLATING TERMINAL: 56161-8*81

4．エンボス梱包品の詳細はSD-560020-002参照
DETAILED TAPING PACKAGE, SEE SD-560020-002

5．半田付け面のコプラナリティ: 0.1mm MAX.
CO-PLANARITY OF SOLDER TAILS TO BE 0.1mm MAX.

6．一般公差
GENERAL TOLERANCES
10 UNDER: ±0.2
10 OVER 30 UNDER: ±0.25
30 OVER: ±0.3
ANGULAR: ±1°

INITIAL REVISION:		
DRWN	SHSHIBATA	2009/02/18
CHECK	HKOMATSU	2009/02/18
APPR	AKANESHIGE	2009/02/18

THIS DRAWING CONTAINS INFORMATION THAT IS PROPRIETARY TO MOLEX ELECTRONIC TECHNOLOGIES, LLC AND SHOULD NOT BE USED WITHOUT WRITTEN PERMISSION

FUNCTIONAL SYMBOLS: EA = 0, EC = 0, EP = 0
DIVISIONAL SYMBOLS

DIMENSION UNITS	SCALE
mm	5:1

GENERAL TOLERANCES (UNLESS SPECIFIED)

	MM	INCH
4 PLACES	±	±
3 PLACES	±	±
2 PLACES	±	±
1 PLACE	±	±
0 PLACES	±	±
ANGULAR TOL	±	°

DRAFT WHERE APPLICABLE MUST REMAIN WITHIN DIMENSIONS

CURRENT REV DESC:

EC NO: 635305
DRWN: MUNEMOTO 2020/04/02
CHK'D: HIIJIMA 2020/04/03
APPR: TOSADA 2020/04/06

INITIAL REVISION:
DRWN: DRAWN BY 0099/99/99
APPR: APPR BY 0099/99/99

THIRD ANGLE PROJECTION | DRAWING: A3-SIZE | SERIES: 560020

molex

2.0MM PITCH W/B CONN.
WAFER ASSY ST. SMT

PRODUCT CUSTOMER DRAWING

DOCUMENT NUMBER	DOC TYPE	DOC PART	REVISION
SD-560020-001	PSD	001	K

MATERIAL NUMBER	CUSTOMER	SHEET NUMBER
	GENERAL MARKET	1 OF 4

DOCUMENT STATUS	P1	RELEASE DATE	2020/04/06 00:33:42

FORMAT: Mel-lega-master-tb-prod-A3
REVISION: E
DATE: 2020/01/14

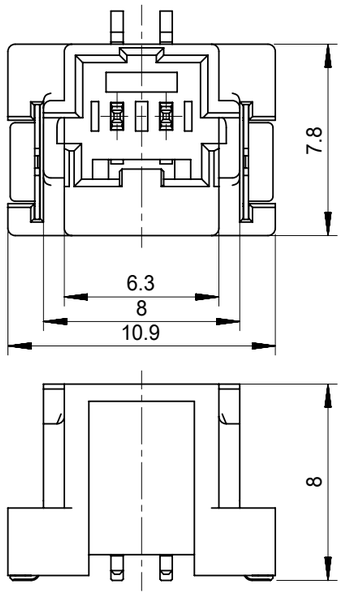

2CKTS

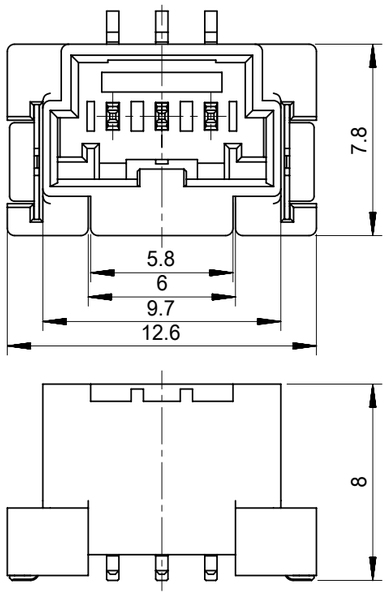

3CKTS

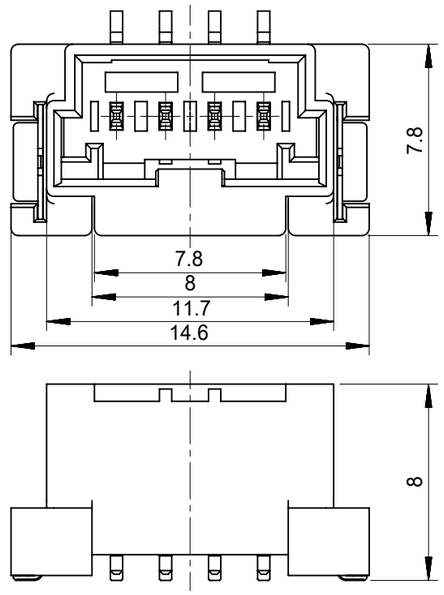

4CKTS

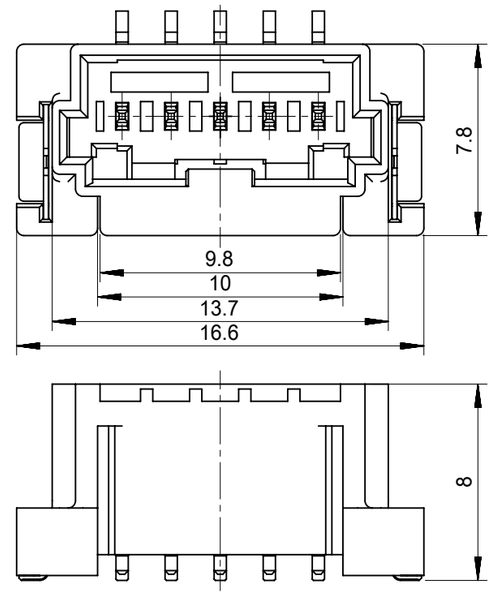

5CKTS

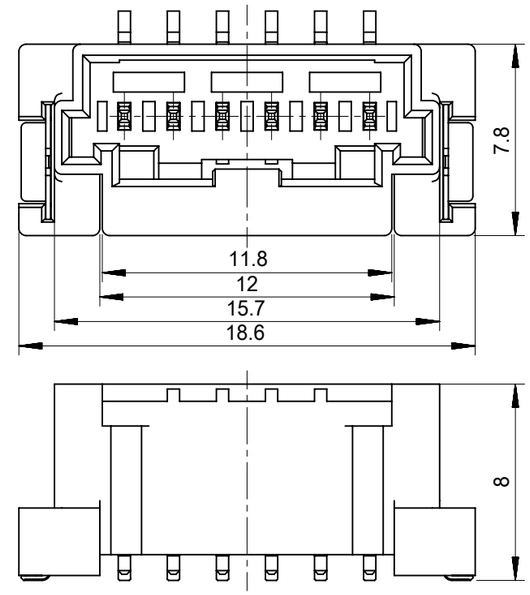

6CKTS

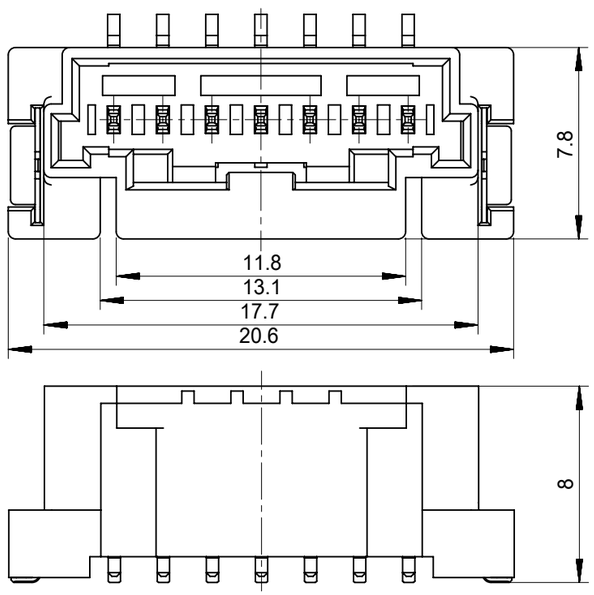

7CKTS

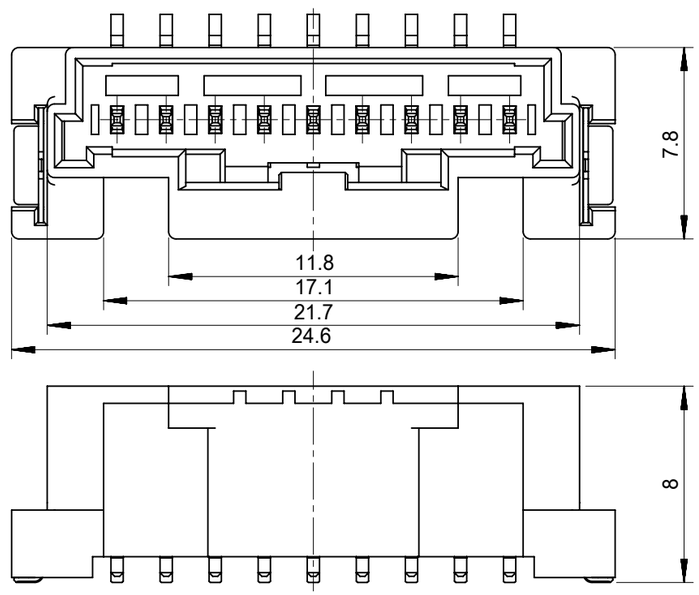

9CKTS

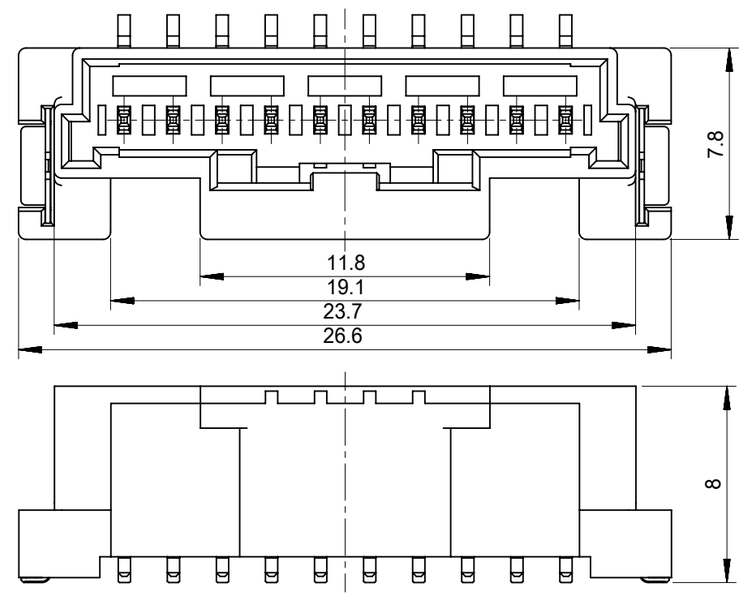

10CKTS

INITIAL REVISION:		
DRWN	SHSHIBATA	2009/02/18
CHECK	HKOMATSU	2009/02/18
APPR	AKANESHIGE	2009/02/18

FUNCTIONAL SYMBOLS: EA = 0, EC = 0, EP = 0

DIVISIONAL SYMBOLS

THIS DRAWING CONTAINS INFORMATION THAT IS PROPRIETARY TO MOLEX ELECTRONIC TECHNOLOGIES, LLC AND SHOULD NOT BE USED WITHOUT WRITTEN PERMISSION

DIMENSION UNITS	SCALE
mm	4:1

GENERAL TOLERANCES (UNLESS SPECIFIED)

	MM	INCH
4 PLACES	±	±
3 PLACES	±	±
2 PLACES	±	±
1 PLACE	±	±
0 PLACES	±	±
ANGULAR TOL	± °	

DRAFT WHERE APPLICABLE MUST REMAIN WITHIN DIMENSIONS

CURRENT REV DESC:

EC NO: 635305
DRWN: MUNEMOTO 2020/04/02
CHK'D: HIIJIMA 2020/04/03
APPR: TOSADA 2020/04/06

INITIAL REVISION:
DRWN: DRAWN BY 0099/99/99
APPR: APPR BY 0099/99/99

THIRD ANGLE PROJECTION | DRAWING: A3-SIZE | SERIES: 560020

molex

2.0MM PITCH W/B CONN.
WAFER ASSY ST. SMT

PRODUCT CUSTOMER DRAWING

DOCUMENT NUMBER	DOC TYPE	DOC PART	REVISION
SD-560020-001	PSD	001	K

MATERIAL NUMBER	CUSTOMER	SHEET NUMBER
	GENERAL MARKET	2 OF 4

DOCUMENT STATUS	P1	RELEASE DATE	2020/04/06 00:33:42

FORMAT: Met-lega-master-tb-prod-A3
REVISION: E
DATE: 2020/01/14

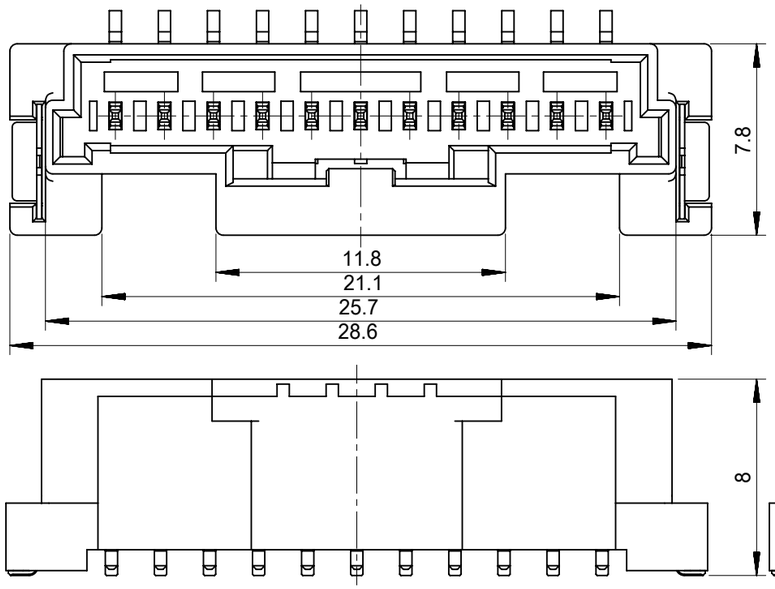

11CKTS

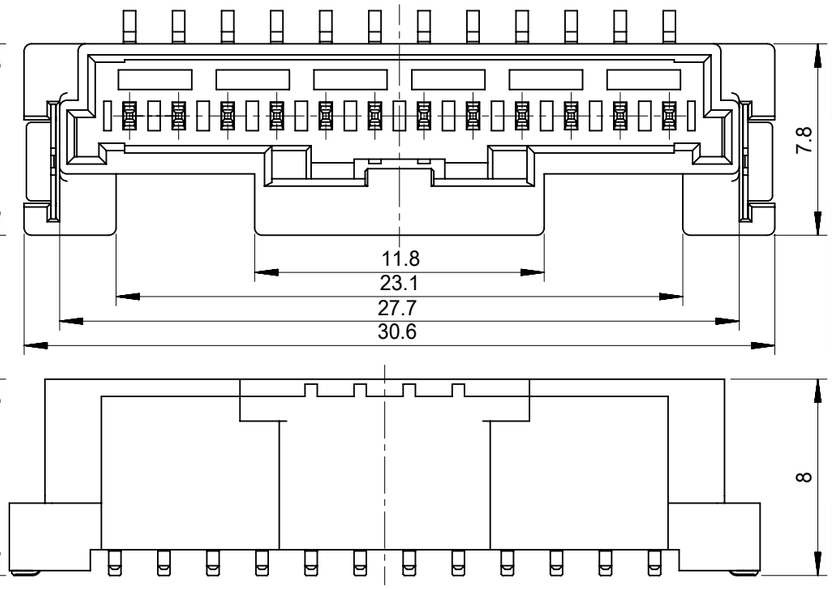

12CKTS

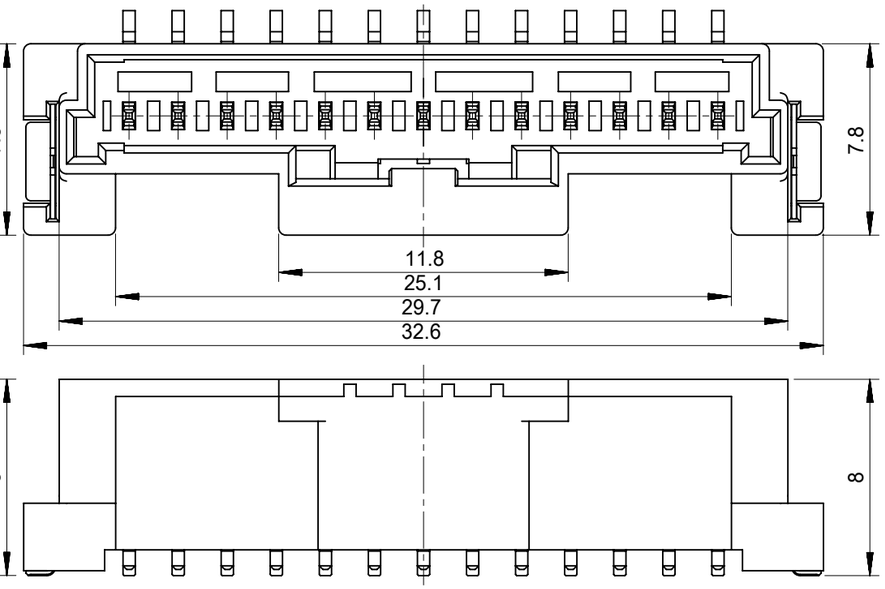

13CKTS

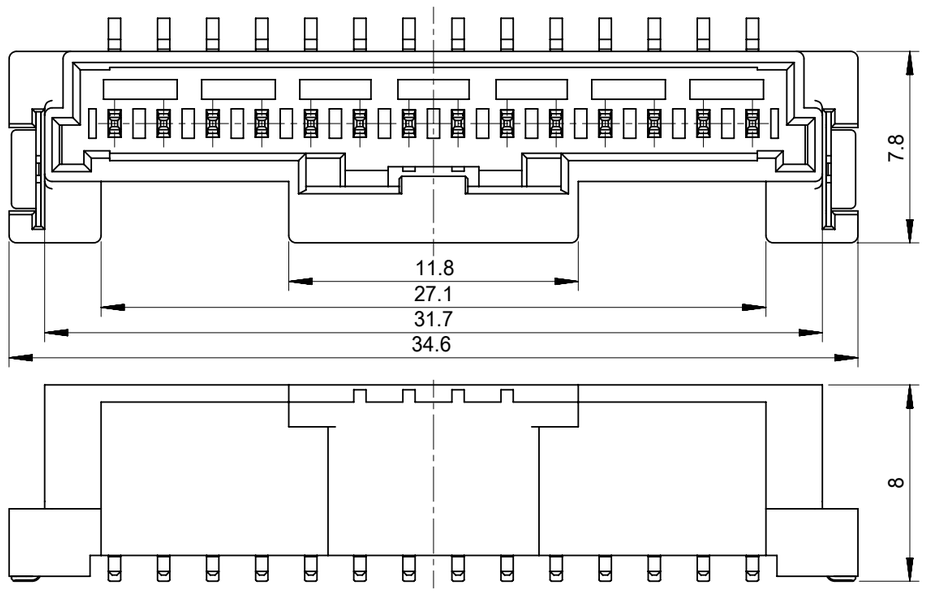

14CKTS

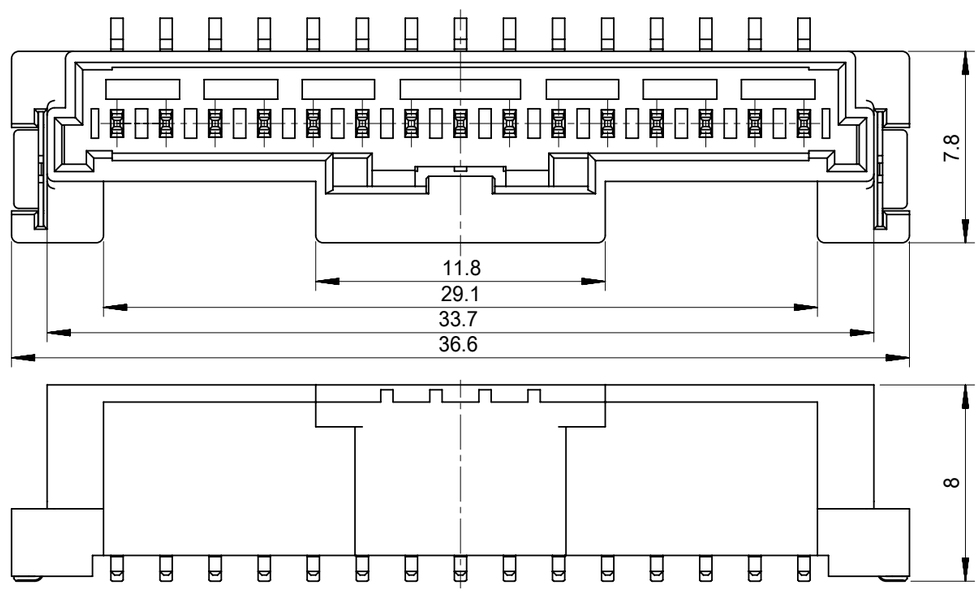

15CKTS

INITIAL REVISION:			
DRWN	SHSHIBATA	2009/02/18	
CHECK	HKOMATSU	2009/02/18	
APPR	AKANESHIGE	2009/02/18	

THIS DRAWING CONTAINS INFORMATION THAT IS PROPRIETARY TO MOLEX ELECTRONIC TECHNOLOGIES, LLC AND SHOULD NOT BE USED WITHOUT WRITTEN PERMISSION

FUNCTIONAL SYMBOLS: EA = 0, EC = 0, EP = 0

DIVISIONAL SYMBOLS

DIMENSION UNITS: mm

SCALE: 4:1

GENERAL TOLERANCES (UNLESS SPECIFIED)

	MM	INCH
4 PLACES	±	±
3 PLACES	±	±
2 PLACES	±	±
1 PLACE	±	±
0 PLACES	±	±
ANGULAR TOL	±	°

DRAFT WHERE APPLICABLE MUST REMAIN WITHIN DIMENSIONS

CURRENT REV DESC:

EC NO:	635305	
DRWN:	MUNEMOTO	2020/04/02
CHK'D:	HIIJIMA	2020/04/03
APPR:	TOSADA	2020/04/06

INITIAL REVISION:		
DRWN:	DRAWN BY	0099/99/99
APPR:	APPR BY	0099/99/99

THIRD ANGLE PROJECTION

DRAWING: A3-SIZE

SERIES: 560020

molex

2.0MM PITCH W/B CONN.
WAFER ASSY ST. SMT

PRODUCT CUSTOMER DRAWING

DOCUMENT NUMBER	DOC TYPE	DOC PART	REVISION
SD-560020-001	PSD	001	K

MATERIAL NUMBER	CUSTOMER	SHEET NUMBER
	GENERAL MARKET	3 OF 4

DOCUMENT STATUS	P1	RELEASE DATE	2020/04/06 00:33:42

FORMAT: Met-lega-master-ib-prod-A3
REVISION: E
DATE: 2020/01/14

Sn NATURAL	11.8	29.1	33.7	36.6	560020-1520	15
	11.8	27.1	31.7	34.6	560020-1420	14
	11.8	25.1	29.7	32.6	560020-1320	13
	11.8	23.1	27.7	30.6	560020-1220	12
	11.8	21.1	25.7	28.6	560020-1120	11
	11.8	19.1	23.7	26.6	560020-1020	10
	11.8	17.1	21.7	24.6	560020-0920	9
	11.8	15.1	19.7	22.6	560020-0820	8
	11.8	13.1	17.7	20.6	560020-0720	7
	11.8	12	15.7	18.6	560020-0620	6
	9.8	10	13.7	16.6	560020-0520	5
	7.8	8	11.7	14.6	560020-0420	4
	5.8	6	9.7	12.6	560020-0320	3
	6.3		8.0	10.9	560020-0220	2
PLATING COLOR	D	C	B	A	EMBOSSED PACKAGE ORDER NO.	CKTS

CONNECTOR SERIES NO. 560020-**08

Au NATURAL	11.8	29.1	33.7	36.6	560020-1530	15
	11.8	27.1	31.7	34.6	560020-1430	14
	11.8	25.1	29.7	32.6	560020-1330	13
	11.8	23.1	27.7	30.6	560020-1230	12
	11.8	21.1	25.7	28.6	560020-1130	11
	11.8	19.1	23.7	26.6	560020-1030	10
	11.8	17.1	21.7	24.6	560020-0930	9
	11.8	15.1	19.7	22.6	560020-0830	8
	11.8	13.1	17.7	20.6	560020-0730	7
	11.8	12	15.7	18.6	560020-0630	6
	9.8	10	13.7	16.6	560020-0530	5
	7.8	8	11.7	14.6	560020-0430	4
	5.8	6	9.7	12.6	560020-0330	3
	6.3		8.0	10.9	560020-0230	2
PLATING COLOR	D	C	B	A	EMBOSSED PACKAGE ORDER NO.	CKTS

CONNECTOR SERIES NO. 560020-**18

Sn BLACK	11.8	29.1	33.7	36.6	560020-1521	15
	11.8	27.1	31.7	34.6	560020-1421	14
	11.8	25.1	29.7	32.6	560020-1321	13
	11.8	23.1	27.7	30.6	560020-1221	12
	11.8	21.1	25.7	28.6	560020-1121	11
	11.8	19.1	23.7	26.6	560020-1021	10
	11.8	17.1	21.7	24.6	560020-0921	9
	11.8	15.1	19.7	22.6	560020-0821	8
	11.8	13.1	17.7	20.6	560020-0721	7
	11.8	12	15.7	18.6	560020-0621	6
	9.8	10	13.7	16.6	560020-0521	5
	7.8	8	11.7	14.6	560020-0421	4
	5.8	6	9.7	12.6	560020-0321	3
	6.3		8.0	10.9	560020-0221	2
PLATING COLOR	D	C	B	A	EMBOSSED PACKAGE ORDER NO.	CKTS

CONNECTOR SERIES NO. 560020-**28

Sn RED						15
						14
						13
						12
						11
						10
						9
	11.8	15.1	19.7	22.6	560020-0822	8
						7
	11.8	12	15.7	18.6	560020-0622	6
						5
	7.8	8	11.7	14.6	560020-0422	4
	5.8	6	9.7	12.6	560020-0322	3
	6.3		8.0	10.9	560020-0222	2
PLATING COLOR	D	C	B	A	EMBOSSED PACKAGE ORDER NO.	CKTS

CONNECTOR SERIES NO. 560020-**48

Sn BLUE						15
						14
						13
						12
						11
						10
						9
	11.8	15.1	19.7	22.6	560020-0823	8
						7
	11.8	12	15.7	18.6	560020-0623	6
						5
	7.8	8	11.7	14.6	560020-0423	4
	5.8	6	9.7	12.6	560020-0323	3
	6.3		8.0	10.9	560020-0223	2
PLATING COLOR	D	C	B	A	EMBOSSED PACKAGE ORDER NO.	CKTS

CONNECTOR SERIES NO. 560020-**68

INITIAL REVISION:
DRWN SHSHIBATA 2009/02/18
CHECK HKOMATSU 2009/02/18
APPR AKANESHIGE 2009/02/18

THIS DRAWING CONTAINS INFORMATION THAT IS PROPRIETARY TO MOLEX ELECTRONIC TECHNOLOGIES, LLC AND SHOULD NOT BE USED WITHOUT WRITTEN PERMISSION

FUNCTIONAL SYMBOLS: EA = 0, EC = 0, EP = 0
DIVISIONAL SYMBOLS

DIMENSION UNITS: mm
SCALE: 1:1
GENERAL TOLERANCES (UNLESS SPECIFIED)

	MM	INCH
4 PLACES	±	±
3 PLACES	±	±
2 PLACES	±	±
1 PLACE	±	±
0 PLACES	±	±
ANGULAR TOL	± °	

DRAFT WHERE APPLICABLE MUST REMAIN WITHIN DIMENSIONS

CURRENT REV DESC:

EC NO: 635305
DRWN: MUNEMOTO 2020/04/02
CHK'D: HIIJIMA 2020/04/03
APPR: TOSADA 2020/04/06

INITIAL REVISION:
DRWN: DRAWN BY 0099/99/99
APPR: APPR BY 0099/99/99

THIRD ANGLE PROJECTION
DRAWING: A3-SIZE
SERIES: 560020

molex

2.0MM PITCH W/B CONN.
WAFER ASSY ST. SMT

PRODUCT CUSTOMER DRAWING

DOCUMENT NUMBER	DOC TYPE	DOC PART	REVISION
SD-560020-001	PSD	001	K

MATERIAL NUMBER	CUSTOMER	SHEET NUMBER
	GENERAL MARKET	4 OF 4

DOCUMENT STATUS	P1	RELEASE DATE	2020/04/06 00:33:42

FORMAT: Met-lega-master-tb-prod-A3
REVISION: E
DATE: 2020/01/14

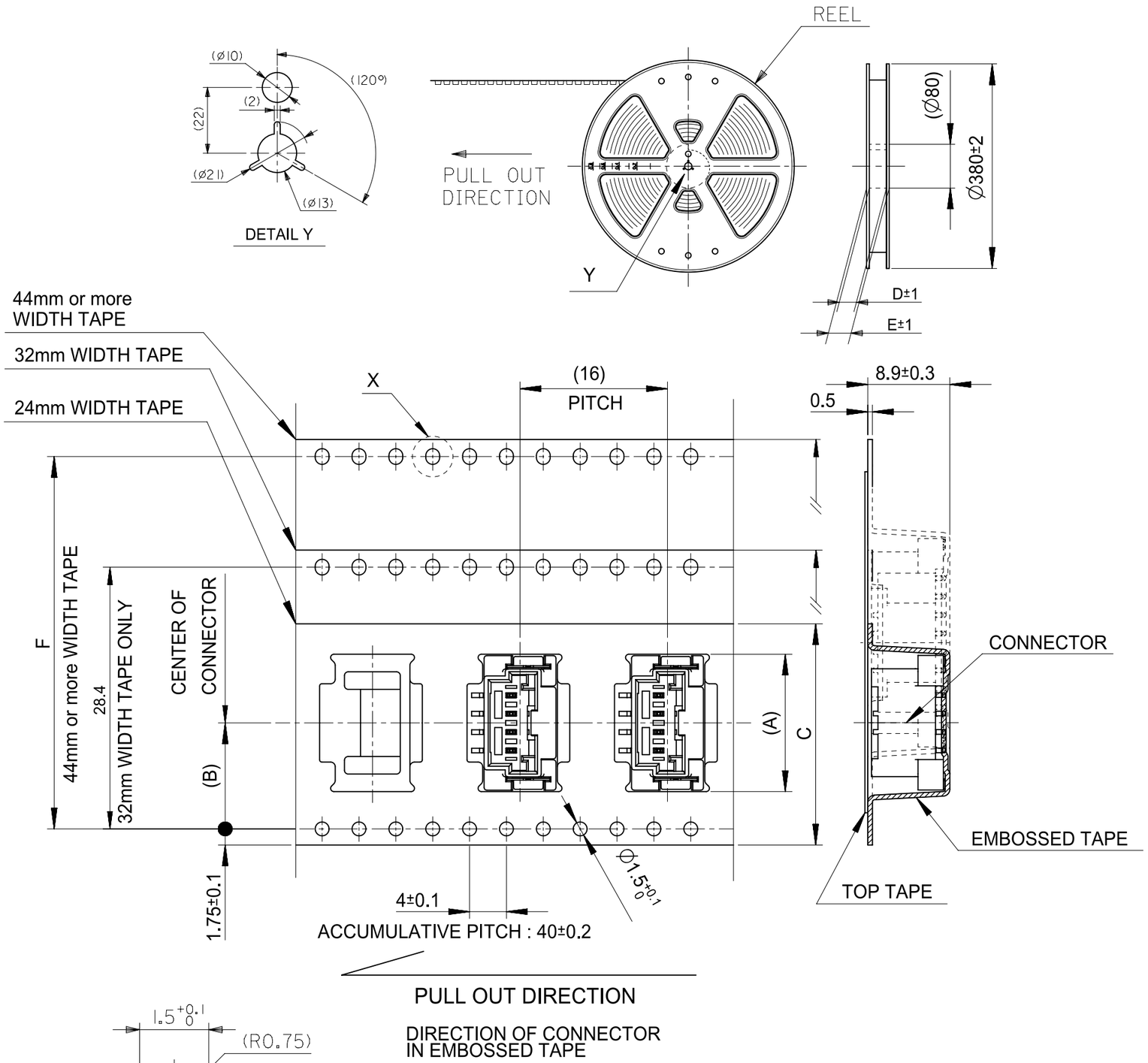

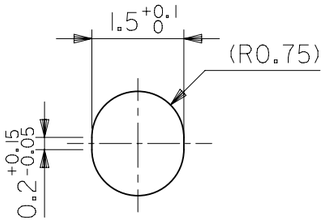

DETAIL X
(SCALE 10:1)

NOTES

1. 製品番号：
   ナチュラル・ 錫めっき 560020-**20
   ナチュラル・ 金めっき 560020-**30
   黒・ 錫めっき 560020-**21
   赤・ 錫めっき 560020-**22
   青・ 錫めっき 560020-**23
   詳細寸法については、製品単体図面を参照ください。
   PART NO.
   NATURAL・ Sn Plating 560020-**20
   NATURAL・ Au Plating 560020-**30
   BLACK・ Sn Plating 560020-**21
   RED・ Sn Plating 560020-**22
   BLUE・ Sn Plating 560020-**23
   SEE SALES DRAWING FOR CONNECTOR
2. 梱包数量： 650個/REEL
   NUMBER OF CONNECTORS 650 PCS/REEL
3. リードテープ長さ
   LEAD TAPE LENGTH

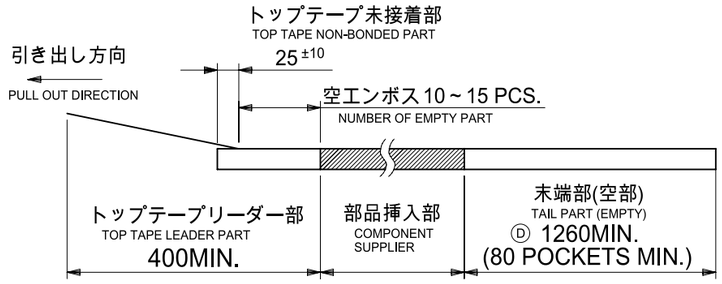

4. 材料
   MATERIAL
   キャリアテープ： ポリスチレン
   CARRIER TAPE: POLYSTYRENE
   トップテープ： PET, PE, PEF
   TOP TAPE: PET, PE, PEF
   リール： ポリスチレン
   REEL: POLYSTYRENE
5. 一般公差
   GENERAL TOLERANCES
   10 UNDER: ±0.2
   10 OVER 30 UNDER: ±0.25
   30 OVER: ±0.3
   ANGULAR: ±1°

THIS DRAWING CONTAINS INFORMATION THAT IS PROPRIETARY TO MOLEX ELECTRONIC TECHNOLOGIES, LLC AND SHOULD NOT BE USED WITHOUT WRITTEN PERMISSION

FUNCTIONAL SYMBOLS	EA = 0, EC = 0, EP = 0
DIVISIONAL SYMBOLS	
DIMENSION UNITS	mm
SCALE	NTS
GENERAL TOLERANCES (UNLESS SPECIFIED)	MM / INCH: 4 PLACES ± ±; 3 PLACES ± ±; 2 PLACES ± ±; 1 PLACE ± ±; 0 PLACES ± ±; ANGULAR TOL ± 0.5°
DRAFT WHERE APPLICABLE MUST REMAIN WITHIN DIMENSIONS	
CURRENT REV DESC:	
PHASE:	
CO NO:	
DRWN: Hideo Yoneyama	2023-10-23
CHK'D: Hiromichi Komatsu	2023-10-23
APPR: Takashi Iida	2023-10-24
INITIAL REVISION:	
DRWN: YTAMAKI	2014/05/23
APPR: MAYAMAMOTO	2014/06/30
THIRD ANGLE PROJECTION	
DRAWING	A3-SIZE
SERIES	560020

molex

2.0MM PITCH W/B ST.
WAFER ASSY EMBOSSED TAPE PACKAGE

PRODUCT SALES DRAWING

DOCUMENT NUMBER	DOC TYPE	DOC PART	REVISION
SD-560020-003	PSD	001	F2

MATERIAL NUMBER	CUSTOMER	SHEET NUMBER
SEE CHART	GENERAL MARKET	1 OF 2

FORMAT: Mes4ega-TC-tb-prod-A3
REVISION: A
DATE: 2021/08/11

Sn NATURAL	52.4	61.4	57.4	56	26.2	36.9	560020-1520	15
						34.9	560020-1420	14
						32.9	560020-1320	13
	40.4	49.4	45.4	44	20.2	30.9	560020-1220	12
						28.9	560020-1120	11
						26.9	560020-1020	10
						24.9	560020-0920	09
						22.9	560020-0820	08
						20.9	560020-0720	07
	28.4	37.4	33.4	32	14.2	18.9	560020-0620	06
						16.9	560020-0520	05
		29.4	25.4	24	11.5	14.9	560020-0420	04
						12.9	560020-0320	03
						11.2	560020-0220	02
PLATING COLOR	F	E	D	C	(B)	(A)	エンボス梱包品 製品番号 EMBOSSED PACKAGE MATERIAL NO.	CIRCUITS

Au NATURAL	52.4	61.4	57.4	56	26.2	36.9	560020-1530	15
						34.9	560020-1430	14
						32.9	560020-1330	13
	40.4	49.4	45.4	44	20.2	30.9	560020-1230	12
						28.9	560020-1130	11
						26.9	560020-1030	10
						24.9	560020-0930	09
						22.9	560020-0830	08
						20.9	560020-0730	07
	28.4	37.4	33.4	32	14.2	18.9	560020-0630	06
						16.9	560020-0530	05
		29.4	25.4	24	11.5	14.9	560020-0430	04
						12.9	560020-0330	03
						11.2	560020-0230	02
PLATING COLOR	F	E	D	C	(B)	(A)	エンボス梱包品 製品番号 EMBOSSED PACKAGE MATERIAL NO.	CIRCUITS

Sn BLACK	52.4	61.4	57.4	56	26.2	36.9	560020-1521	15
						34.9	560020-1421	14
						32.9	560020-1321	13
	40.4	49.4	45.4	44	20.2	30.9	560020-1221	12
						28.9	560020-1121	11
						26.9	560020-1021	10
						24.9	560020-0921	09
						22.9	560020-0821	08
						20.9	560020-0721	07
	28.4	37.4	33.4	32	14.2	18.9	560020-0621	06
						16.9	560020-0521	05
		29.4	25.4	24	11.5	14.9	560020-0421	04
						12.9	560020-0321	03
						11.2	560020-0221	02
PLATING COLOR	F	E	D	C	(B)	(A)	エンボス梱包品 製品番号 EMBOSSED PACKAGE MATERIAL NO.	CIRCUITS

Sn RED								15
								14
								13
	40.4	49.4	45.4	44	20.2			12
								11
								10
								09
						22.9	560020-0822	08
								07
	28.4	37.4	33.4	32	14.2	18.9	560020-0622	06
								05
		29.4	25.4	24	11.5	14.9	560020-0422	04
						12.9	560020-0322	03
						11.2	560020-0222	02
PLATING COLOR	F	E	D	C	(B)	(A)	エンボス梱包品 製品番号 EMBOSSED PACKAGE MATERIAL NO.	CIRCUITS

Sn BLUE								15
								14
								13
	40.4	49.4	45.4	44	20.2			12
								11
								10
								09
						22.9	560020-0823	08
								07
	28.4	37.4	33.4	32	14.2	18.9	560020-0623	06
								05
		29.4	25.4	24	11.5	14.9	560020-0423	04
						12.9	560020-0323	03
						11.2	560020-0223	02
PLATING COLOR	F	E	D	C	(B)	(A)	エンボス梱包品 製品番号 EMBOSSED PACKAGE MATERIAL NO.	CIRCUITS

THIS DRAWING CONTAINS INFORMATION THAT IS PROPRIETARY TO MOLEX ELECTRONIC TECHNOLOGIES, LLC AND SHOULD NOT BE USED WITHOUT WRITTEN PERMISSION

FUNCTIONAL SYMBOLS: FA = 0, FC = 0, FP = 0
DIVISIONAL SYMBOLS

DIMENSION UNITS: mm
SCALE: NTS

GENERAL TOLERANCES (UNLESS SPECIFIED)

	MM	INCH
4 PLACES	±	±
3 PLACES	±	±
2 PLACES	±	±
1 PLACE	±	±
0 PLACES	±	±
ANGULAR TOL	± 0.5°	

DRAFT WHERE APPLICABLE MUST REMAIN WITHIN DIMENSIONS

CURRENT REV DESC:

PHASE:
CO NO:
DRWN: Hideo Yoneyama 2023-10-23
CHK'D: Hiromichi Komatsu 2023-10-23
APPR: Takashi Iida 2023-10-24

INITIAL REVISION:
DRWN: YTAMAKI 2014/05/23
APPR: MAYAMAMOTO 2014/06/30

molex

2.0MM PITCH W/B ST.
WAFER ASSY EMBOSSED TAPE PACKAGE

PRODUCT SALES DRAWING

DOCUMENT NUMBER	DOC TYPE	DOC PART	REVISION
SD-560020-003	PSD	001	F2

THIRD ANGLE PROJECTION	DRAWING	SERIES	MATERIAL NUMBER	CUSTOMER	SHEET NUMBER
	A3-SIZE	560020	SEE CHART	GENERAL MARKET	2 OF 2