REVISIONS					
REV.	ECN NO.	LOCATION	DESCRIPTION	DATE	DESIGN
A0	N/A		INITIAL RELEASE	/	/
A1	N/A		图面升级整理图面	2024.12.20	阿树

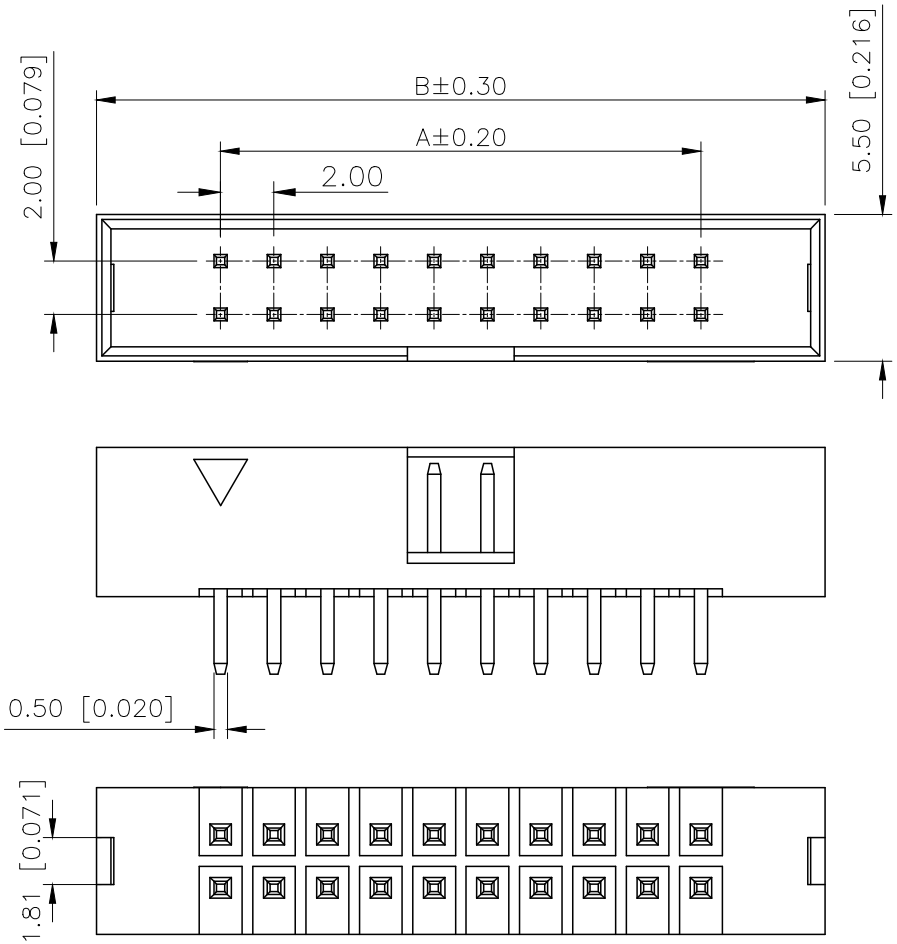

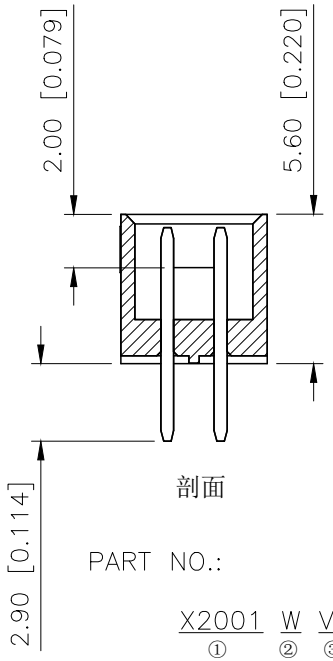

剖面

Specifications:
规格：
Voltage rating:250V AC/DC
额定电压：250V AC/DC
Current rating:1A AC/DC
额定电流：1A AC/DC
Withstanding voltage:500V AC/minute
耐受电压：500V AC/分钟
Temperature range:−40℃−+125℃
温度范围：−40℃−+125℃
Insulation resistance:1000MΩ min
绝缘电阻：1000MΩ Min
Contact resistance:20mΩ Max
接触电阻：20mΩ Max

PART NO.:

X2001 W V−2xXX B−6T V01
① ② ③ ④ ⑤ ⑥ ⑦

①Series No
②Category:W−Wafer
③Welding Board Angle:RV−Stright 180°
④Row No.Pin No:2xXX−2x03−2x30P
⑤Category:B−have gaps
⑥Material:6T−Nylon 6T UL94V−0
⑦Plating:V01−Gold Flash

Poles	Dimensions		Poles	Dimensions	
	A	B		A	B
2x03	4.00	13.30	2x13	24.00	33.30
2x04	6.00	15.30	2x15	28.00	37.30
2x05	8.00	17.30	2x17	32.00	41.30
2x06	10.00	19.30	2x18	34.00	43.30
2x07	12.00	21.30	2x20	38.00	47.30
2x08	14.00	23.30	2x22	42.00	51.30
2x09	16.00	25.30	2x25	48.00	57.30
2x10	18.00	27.30	2x30	58.00	67.30
2x12	20.00	31.30	/		

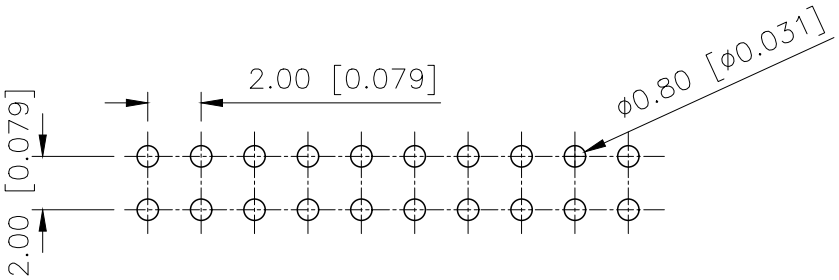

PCB LAYOUT

PART NO	Material	Material(Pin)	Suitable XKB IDC
X2001WV−2xXXB−6TV01	Nylon 6T	Brass	X2001HA3−2xXX

AuGLAR	±5°
X.	±0.40
X.x	±0.30
X.xx	±0.20
X.xxx	±0.15
UNSPECIFIED TOLERAuCES	

XKB Connection 星创

DESIGN	阿树	VIEW:	MODEL TYPE: 2.0mm Jane cattle 简牛
CHECKED		UNIT: mm/in	PART NO.: X2001WV−2xXXB−6TV01
APPROVED		SIZE: A4	DWG NO.:

XKB INDUSTRIAL PRECISION CO.,LIMITED

SCALE	PAGE	REVISION
N/A	1/1	A1