Product NO.	DOSIN-801-0013			
REV	DESCRIPTION	DWN	DATE	APPROVEN
A	First issue	JIM	2012/11/02	John kine
B	(1)3.0改为3.7, (2)面板ABS材料改为PA尼龙料	zelin zhang	2019/09/05	John kine

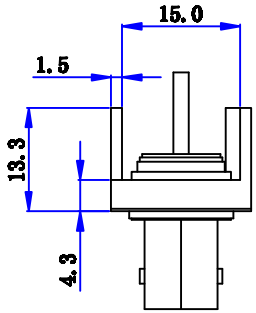

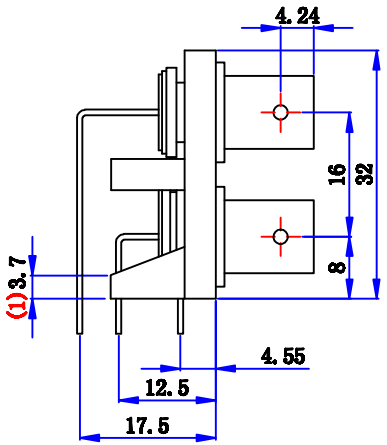

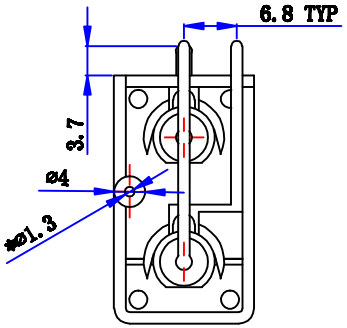

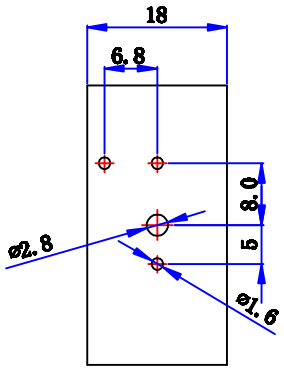

Specifications

Impedance:50 Ohms
Frequency Range:DC~3G
VSWR:1.3MAX
Working Voltage:500V rms @ sea level
Insulation Resistance:5000 Ohms min
Temperature Range:-55℃ TO +155℃
Relative Temperature: ≤95%(40° C±2° C)
Drawings products are in line with ROHS standards

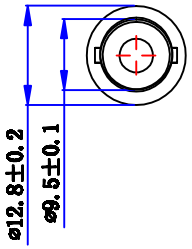

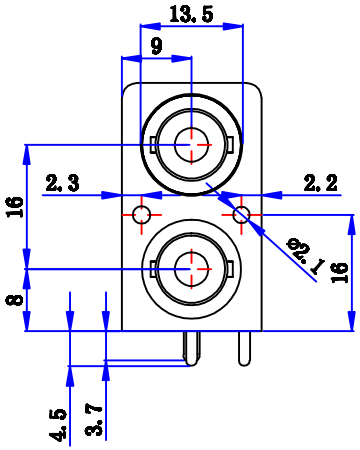

NO	DESCRIPTION	MATERIAL	FINISH	QTY
5	Solder column	Iron	NICKEL	2
4	IRON PLATES	Iron	NICKEL	1
3	PANEL	(2)PA	BLACK	1
2	PIN	BRASS	NICKEL	2
1	BODY	ZINC	NICKEL	2

NOTE:

DRAWN Zelin. Zhang	2012/11/10	Tolerance	0-6 ±0.15; 6-30 ±0.20; 30-120 ±0.5; Angular ±2°
CHECKED		View	
APPROVALS John Kine	12/04.2012	UNIT	MM
		SCALE	1:1

Dosin Industrial(H.K)Co.Ltd
东莞市德索五金电子制品有限公司
Dosin Hardware Electronics Co.,Ltd
E-mail:dosin2005@163.com
dosin2005@dosin-china.com
Web:http://www.dosinconn.com
TEL:(0086)769-81153906
FAX:(0086)769-81875836

Name: BNC jack 2x1 CONNECTOR DNN

SIZE	Product NO.	REV
A	DOSIN-801-0013	B

DateTime	CAD FILE	SHEET: 1 OF 1
2019/09/05	D/company drawings/BD	