| DATE | DESCRIPTION | REV. |
|---|---|---|
| 9.22.97 | CHANGE AS PER ECR 97-042 | B |

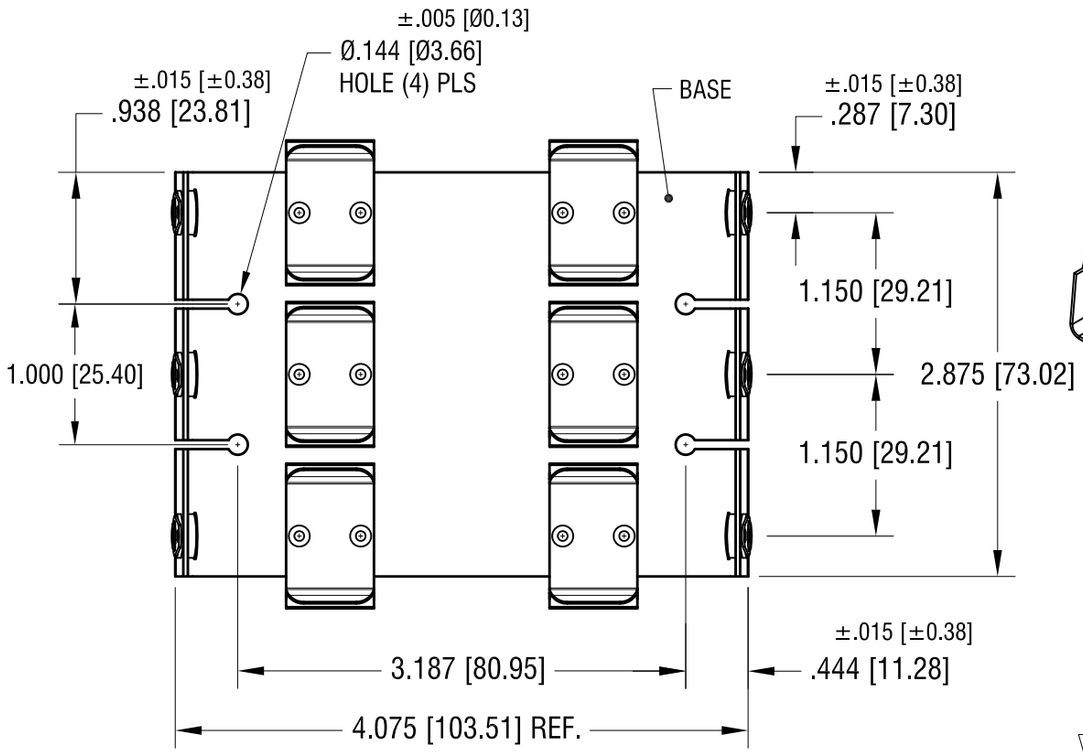


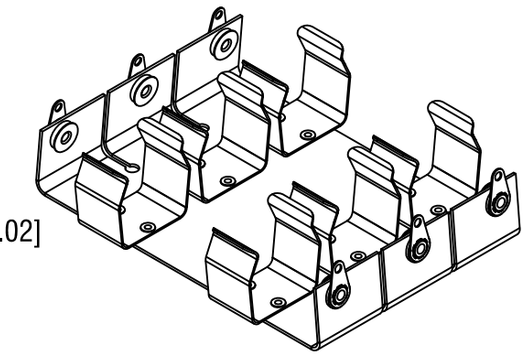

ISOMETRIC VIEW
SCALE: .7X

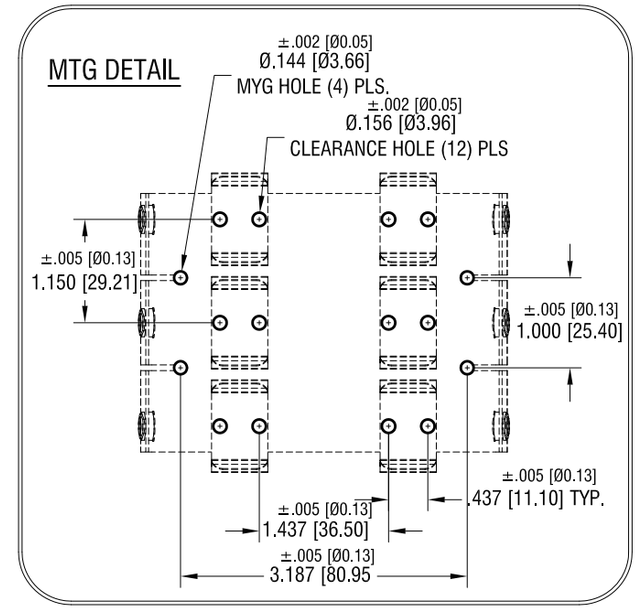


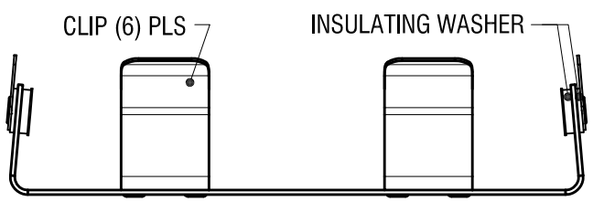


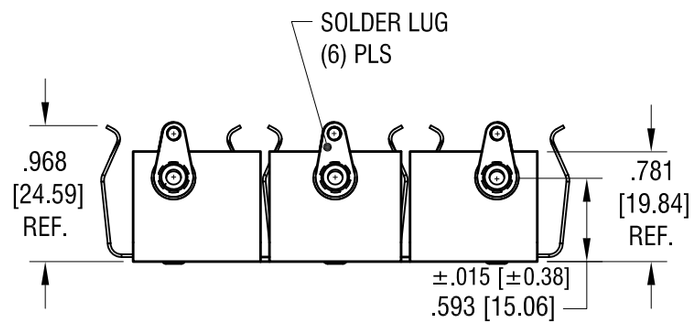


NOTES:
1. BASE: MAT'L - .032 [.81] TH'K ALUMINUM
2. CLIP: MAT'L - .020 [.50] TH'K ALUMINUM
3. SOLDER LUG: MAT'L - BRASS
FINISH - TIN PLATE

THIS DOCUMENT IS THE PROPERTY OF KEYSTONE ELECTRONICS CORP. AND SHALL NOT BE REPRODUCED, DISTRIBUTED OR USED AS A BASIS FOR MANUFACTURE WITHOUT PRIOR WRITTEN PERMISSION FROM KEYSTONE ELECTRONICS CORP.

**KEYSTONE ELECTRONICS CORP.**
www.keyelco.com • NEW HYDE PARK, NY 11040 • Tel (516) 328-7500

PART NAME: BATTERY HOLDER (6)'C' CELLS

MATERIAL: AS NOTED

FINISH: AS NOTED

DRN BY: NT | DATE: 1.26.82

APP'D: MR | SCALE: .8X

TOLERANCES INCH [MM]
DECIMAL ± .010 [± 0.25 ]
ANGULAR ± 1°
UNLESS OTHERWISE SPECIFIED

CODE: C

DWG NO. 197