REVISIONS					
REV.	ECN NO.	LOCATION	DESCRIPTION	DATE	DESIGN
A0	N/A		INITIAL RELEASE	/	/
A1	N/A		图面升级整理图面	2024.12.20	阿树

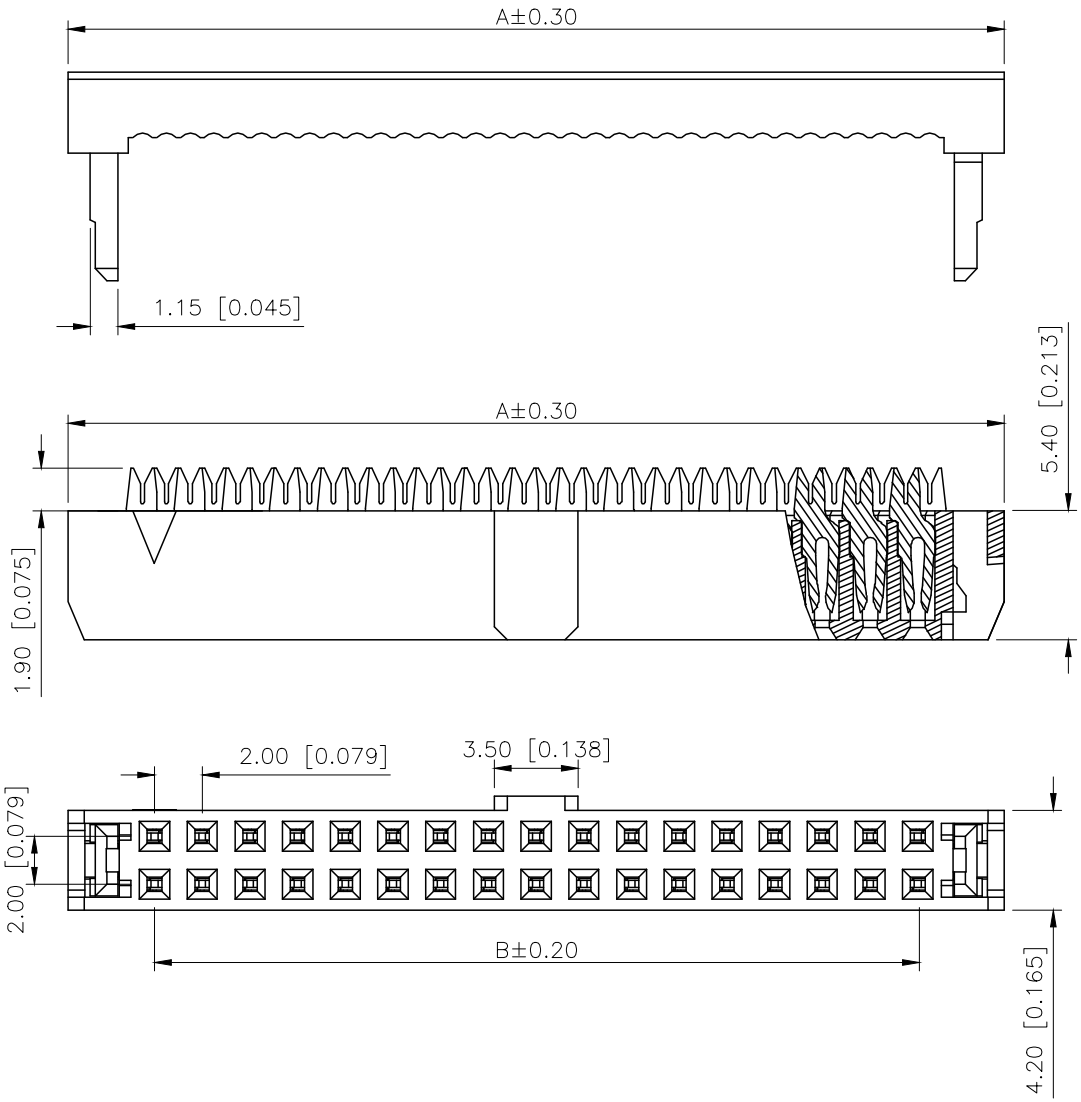

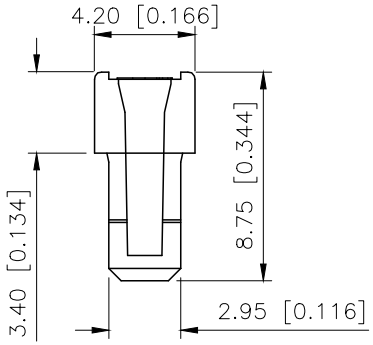

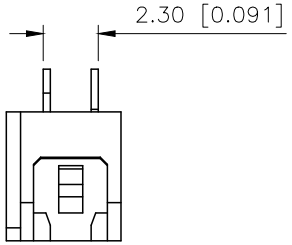

Specifications:
规格：
Voltage rating:250V AC/DC
额定电压：250V AC/DC
Current rating:1A AC/DC
额定电流：1A AC/DC
Withstanding voltage:500V AC/minute
耐受电压：500V AC/分钟
Temperature range:−40℃−+125℃
温度范围：−40℃−+125℃
Insulation resistance:1000MΩ min
绝缘电阻：1000MΩ Min
Contact resistance:20mΩ Max
接触电阻：20mΩ Max

PART NO.:

X2001 HA−2xXX−PT V01
① ② ③ ④ ⑤

①Series No
②Category:HA−Two piece double contacts
③Row No.Pin No:2xXX−2x03~2x30 Pin
④Material:PT−PBT Glass Fiber UL94V−0
⑤Plating:V01−Gold Flash

Poles	Dimensions		Poles	Dimensions	
	A	B		A	B
2x03	11.20	4.00	2x13	31.20	24.00
2x04	13.20	6.00	2x14	33.20	26.00
2x05	15.20	8.00	2x15	35.20	28.00
2x06	17.20	10.00	2x17	39.20	32.00
2x07	19.20	12.00	2x18	41.20	34.00
2x08	21.20	14.00	2x20	45.20	38.00
2x09	23.20	16.00	2x22	49.20	42.00
2x10	25.20	18.00	2x25	55.20	48.00
2x11	27.20	20.00	2x30	65.20	58.00
2x12	29.20	22.00	/		

PART NO	Material	Material(Pin)	Suitable XKB Wafer
X2001HA−2xXX−PTV01	PBT Glass Fiber	Brass	X2001W

AuGLAR	±5°
X.	±0.40
X.x	±0.30
X.xx	±0.20
X.xxx	±0.15
UNSPECIFIED TOLERAuCES	

XKB Connection 星创

DESIGN	阿树	VIEW:	MODEL TYPE: 2.0mm IDC Connector
CHECKED		UNIT: mm/in	PART NO.: X2001HA−2xXX−PTV01
APPROVED		SIZE: A4	DWG NO.:

XKB INDUSTRIAL PRECISION CO.,LIMITED

SCALE	PAGE	REVISION
N/A	1/1	A1