IEC Appliance Inlet C20 with Line Switch, 2-pole

Snap-In Version or Screw-On Version
illuminated version

C20

70° C

See below:
Approvals and Compliances

Description

- Panel mount :
  Screw-on version from front or rear side, snap-in version from front side
- 2 Functions :
  Appliance Inlet Protection class I , Line Switch 2-pole
- Quick connect terminals 6.3 x 0.8 mm

Characteristics

- All single elements are already wired
- Unwired versions available on request
- Line switch non-illuminated or illuminated
- Ideal for application with high transient loads
- Suitable for use in equipment according to IEC/UL 60950

Other versions on request

- Unwired versions
- Line switch with other rocker marking
- For protection class II
- Variant with notch for V-Lock mating Cordsets

References

Alternative: version with line filter EC12

Weblinks

pdf datasheet, html-datasheet, General Product Information, Distributor-Stock-Check, Accessories, Detailed request for product, Landing Page

Newly available variants corresponding to V-Lock mating cordset. The connector is equipped with a notch intended for use with the latching cordset. The cord latching system prevents against accidental removal of the cordset.

Technical Data

Ratings IEC	16 A / 250 VAC; 50 Hz
Ratings UL/CSA	20 A / 250 VAC; 60 Hz
Dielectric Strength	> 2.5 kVAC between L-N > 3 kVAC between L/N-PE (1 min/50 Hz)
Allowable Operation Temperature	-25 °C to 70 °C
IP-Protection	from front side IP 40 acc. to IEC 60529
Insulation cover	Suitable for appliances with protection class I acc. to IEC 61140
Terminal	Quick connect terminals 6.3 x 0.8 mm
Panel Thickness S	Screw: max 8 mm Mounting screw torque max 0.5 Nm Snap-in: 1.5/2/2.5 mm
Material: Housing	Thermoplastic, black, UL 94V-0

appliance inlet/-outlet	C20 acc. to IEC 60320-1, UL 498, CSA C22.2 no. 42 (for cold conditions) pin-temperature 70 °C, 16 A, Protection Class I
Line Switch	Rocker switch 2-pole, non-illuminated or illuminated, acc. to IEC 61058-1 Technical Details

Approvals and Compliances

Detailed information on product approvals, code requirements, usage instructions and detailed test conditions can be looked up in Details about Approvals

SCHURTER products are designed for use in industrial environments. They have approvals from independent testing bodies according to national and international standards. Products with specific characteristics and requirements such as required in the automotive sector according to IATF 16949, medical technology according to ISO 134485 or in the aerospace industry can be offered exclusively with customer-specific, individual agreements by SCHURTER.

Downloaded from Arrow.com.

Approvals

The approval mark is used by the testing authorities to certify compliance with the safety requirements placed on electronic products.

Approval Reference Type: EC11

Approval Logo	Certificates	Certification Body	Description
10	VDE Approvals	VDE	Certificate Number: 40001031
c US	UL Approvals	UL	UL File Number: E96454
	CQC Approvals	CQC	CCC Certificate Number: 2014010204683955

Product standards

Product standards that are referenced

Organization	Design	Standard	Description
IEC	Designed according to	IEC 60320-1	Appliance couplers for household and similar general purposes
IEC	Designed according to	IEC 61058-1	Switches for appliances. Part 1. General requirements
UL	Designed according to	UL 498	Standard for Attachment Plugs and Receptacles
CSA Group	Designed according to	CSA C22.2 no. 42	General Use Receptacles, Attachment Plugs, and Similar Wiring Devices

Application standards

Application standards where the product can be used

Organization	Design	Standard	Description
IEC	Designed for applications acc.	IEC/UL 60950	IEC 60950-1 includes the basic requirements for the safety of information technology equipment.
IEC	Designed for applications acc.	IEC 60335-1	Safety of electrical appliances for household and similar purposes. Meets the requirements for appliances in unattended use. This includes the enhanced requirements of glow wire tests acc. to IEC 60695-2-12 and -13.

Compliances

The product complies with following Guide Lines

Identification	Details	Initiator	Description
CE	CE declaration of conformity	SCHURTER AG	The CE marking declares that the product complies with the applicable requirements laid down in the harmonisation of Community legislation on its affixing in accordance with EU Regulation 765/2008.
RoHS COMPLIANT	RoHS	SCHURTER AG	EU Directive RoHS 2011/65/EU
	China RoHS	SCHURTER AG	The law SJ / T 11363-2006 (China RoHS) has been in force since 1 March 2007. It is similar to the EU directive RoHS.
REACH	REACH	SCHURTER AG	On 1 June 2007, Regulation (EC) No 1907/2006 on the Registration, Evaluation, Authorization and Restriction of Chemicals 1 (abbreviated as "REACH") entered into force.
V-Lock		SCHURTER AG	V-Lock system are based on a matching plug-dose combination. The connector is equipped with a notch intended for use with the latching cordset. The cord latching system prevents against accidental removal of the cordset.
	White paper Glow wire test	SCHURTER AG	Meets the requirements of IEC 60335-1 for appliances in unattended use. This includes the enhanced requirements of glow wire tests acc. to IEC 60695-2-12 and -13.

Downloaded from Arrow.com.

Dimensions [mm]

Screw-on mounting

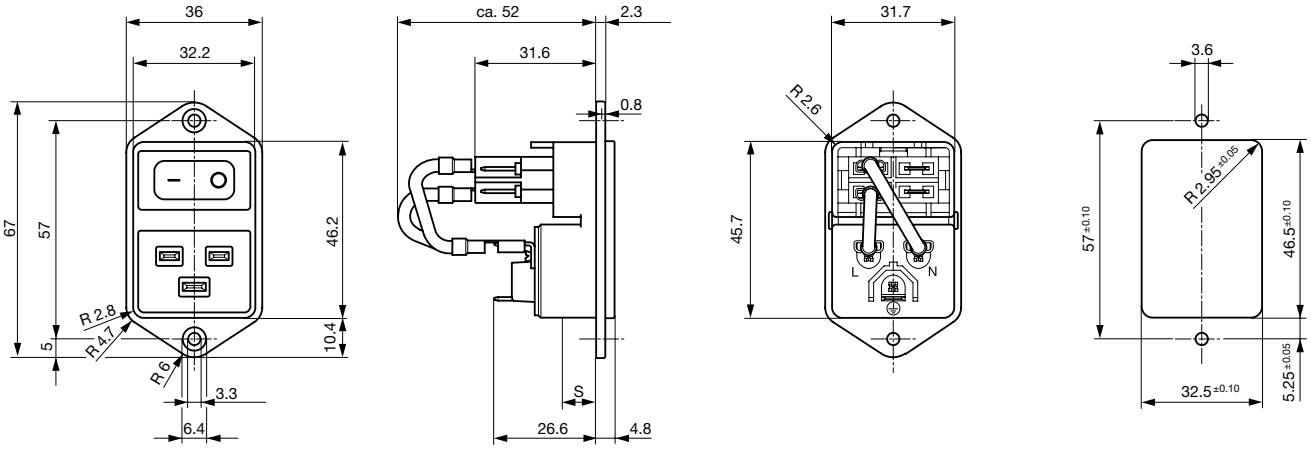

Snap-in mounting

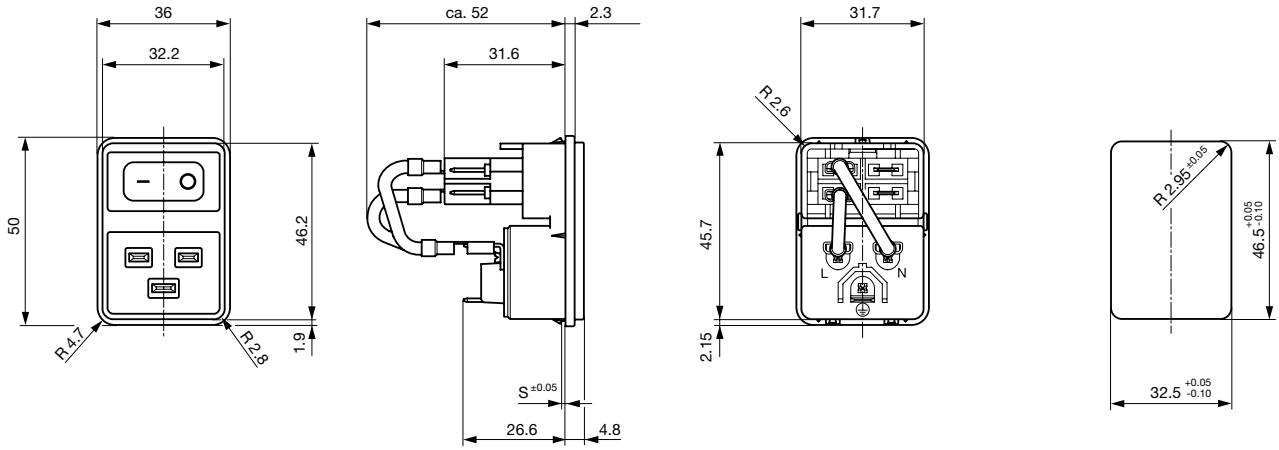

Diagrams

Line switch non-illuminated

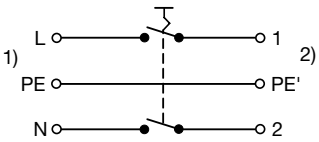

1) Line
2) Load

Line switch illuminated

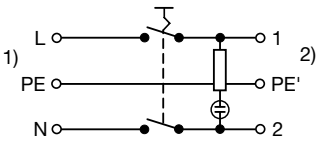

1) Line
2) Load

All Variants

Panel mounting	Panel Thickness s [mm]	Illumination	Color	Internally wired	V-Lock	Order Number
Snap-in	1.5		-	●		EC11.0001.201
Snap-in	1.5		-	●	●	EC11.0001.201.21
Snap-in	1.5		-			EC11.0001.202
Snap-in	1.5	●	red	●		EC11.0021.201
Snap-in	1.5	●	red	●	●	EC11.0021.201.21
Snap-in	1.5	●	red			EC11.0021.202

Downloaded from Arrow.com.

Panel mounting	Panel Thickness s [mm]	Illumination	Color	Internally wired	V-Lock	Order Number
Snap-in	1.5	●	green	●		EC11.0031.201
Snap-in	1.5	●	green	●	●	EC11.0031.201.21
Snap-in	1.5	●	green			EC11.0031.202
Snap-in	2		-	●		EC11.0001.301
Snap-in	2		-	●	●	EC11.0001.301.21
Snap-in	2		-			EC11.0001.302
Snap-in	2	●	red	●		EC11.0021.301
Snap-in	2	●	red	●	●	EC11.0021.301.21
Snap-in	2	●	red			EC11.0021.302
Snap-in	2	●	green	●		EC11.0031.301
Snap-in	2	●	green	●	●	EC11.0031.301.21
Snap-in	2	●	green			EC11.0031.302
Snap-in	2.5		-	●		EC11.0001.401
Snap-in	2.5		-			EC11.0001.402
Snap-in	2.5	●	red	●		EC11.0021.401
Snap-in	2.5	●	red			EC11.0021.402
Snap-in	2.5	●	green	●		EC11.0031.401
Snap-in	2.5	●	green			EC11.0031.402
Screw	-		-	●		EC11.0001.001
Screw	-		-	●	●	EC11.0001.001.21
Screw	-		-			EC11.0001.002
Screw	-	●	red	●		EC11.0021.001
Screw	-	●	red	●	●	EC11.0021.001.21
Screw	-	●	red			EC11.0021.002
Screw	-	●	green	●		EC11.0031.001
Screw	-	●	green	●	●	EC11.0031.001.21
Screw	-	●	green			EC11.0031.002

Most Popular.

Availability for all products can be searched real-time:https://www.schurter.com/en/Stock-Check/Stock-Check-SCHURTER

Packaging unit 25 Pcs

Downloaded from Arrow.com.

Accessories

	Description	
	Wire Harness Wire harness for SCHURTER products	
	Assorted Covers Rear Cover	
		0859.0076
	Cord retaining kits Cord retaining strain relief	
	Flat head, H	4700.0008

Mating Outlets/Connectors

	Category / Description	
	Connector Overview complete	
	IEC Connector C19, Rewireable, Straight	4795
	IEC Connector C19, Rewireable, Angled	4790
	Connector further types to EC11	
	Power Supply Cord Overview complete	
	Cord Sets 10 A, North America, 3.0 m, Connector IEC C13, SJT 3x18 AWG, Transparent	4300.0920
	Cord Sets 16 A, Europlug, 2.5 m, Connector IEC C19, H05VV-F3G1.5, black	6004.0395
	Cord Sets 16 A, Interconnection, 1.0 m, Connector IEC C19, H05VV-F3G1.5, black	6020.0392
	Cord Sets 16 A, Interconnection, 2.0 m, Connector IEC C19, H05VV-F3G1.5, black	6020.0394
	Cord Sets 16 A, North America, 2.5 m, Connector IEC C19, SJT 3x14 AWG, black	6009.5195
	Power Supply Cord further types to EC11	

Mating Outlets/Connectors shuttered

	Power Cord Overview complete	
	VAC19KS, Overview, V-Lock cord retaining, diverse Connector IEC C19, diverse, black	VAC19KS
	Power Cord further types to EC11	

18.12.2018

The specifications, descriptions and illustrations indicated in this document are based on current information. All content is subject to modifications and amendments. Information furnished is believed to be accurate and reliable. However, users should independently evaluate the suitability and test each product selected for their own applications.

Downloaded from Arrow.com.